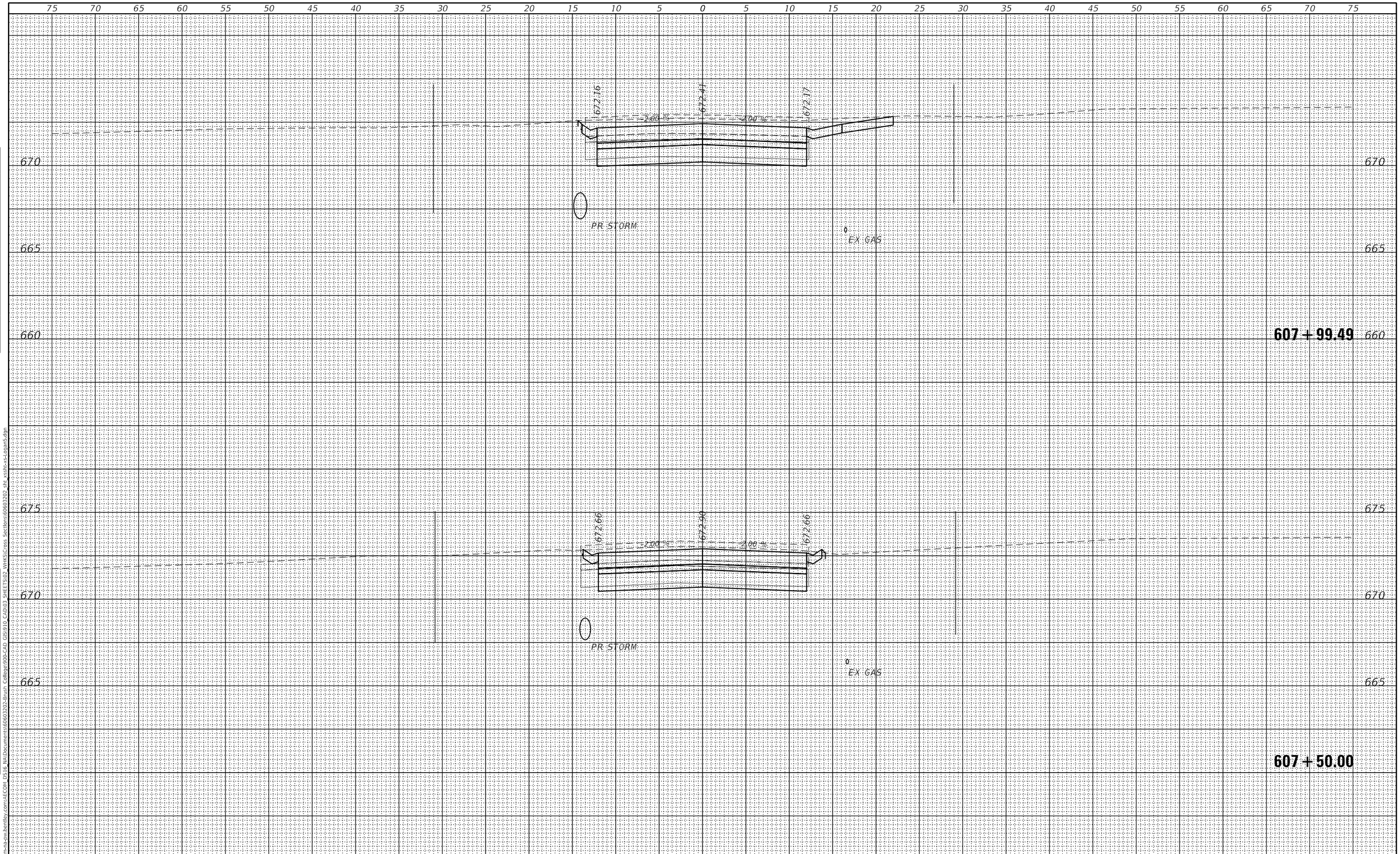

FINAL SURVEY	BY	DATE
SURVEYED		
PLOTTED		
TEMPLATE		
AREAS		
AREAS CHECKED		

NOTE BOOK
NO.

ORIGINAL SURVEY	BY	DATE
SURVEYED		
PLOTTED		
TEMPLATE		
AREAS		
AREAS CHECKED		

NOTE BOOK
NO.

MODEL: Default
FILE NAME: pw:\\aecom-na-pw.bentley.com:AECOM DS16 NA\Documents\60603202-Brush College90b-CAD GIS\910 CAD\03 SHEETS\02 VHKS\Cross Sections\60603202 sht xssht-xs-Logan5.dgn

design firm no. 184001036

whks
engineers + planners + land surveyors

USER NAME = $OPERATOR$	DESIGNED - -	REVISED
	CHECKED - -	REVISED
PLOT SCALE = 10.0000 ' / in.	DRAWN - -	REVISED
PLOT DATE = 6/17/2020	CHECKED - -	REVISED

STATE OF ILLINOIS
DEPARTMENT OF TRANSPORTATION

EAST LOGAN STREET
CROSS SECTIONS

SCALE: 1" = 5' | SHEET 12 OF 14 SHEETS | STA. 607+50.00 TO STA. 607+99.49

F.A.U. RTE.	SECTION	COUNTY	TOTAL SHEETS	SHEET NO.
7448	09-00933-01-BR	MACON	572	529

CONTRACT NO. 6WGY(165)

ILLINOIS | FED. AID PROJECT

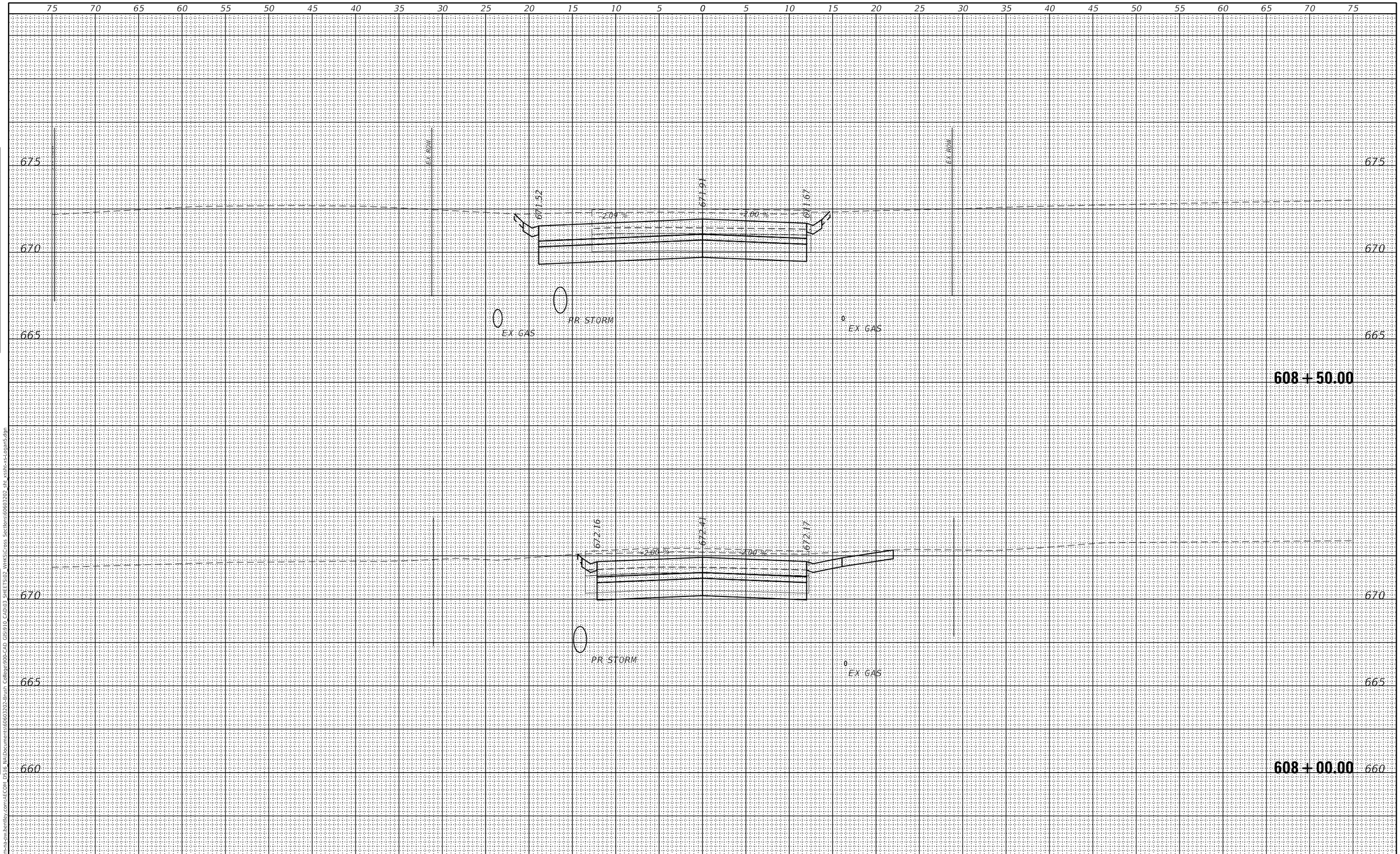

FINAL SURVEY		BY	DATE
NOTE BOOK	SURVEYED		
	PLOTTED		
	TEMPLATE		
	AREAS		
NO.	AREAS CHECKED		

ORIGINAL SURVEY		BY	DATE
NOTE BOOK	SURVEYED		
	PLOTTED		
	TEMPLATE		
	AREAS		
NO.	AREAS CHECKED		

MODEL: Default
FILE NAME: pw:\\aecom-na-pw.bentley.com:AECOM DS16 NA\Documents\60603202-Brush College 90b-CAD GIS\910 CAD\03 SHEETS\02 VHKS\Cross Sections\60603202 sht xssht-xs-Logan5.dgn

design firm no. 184001036
whks
engineers + planners + land surveyors

USER NAME = $OPERATOR$	DESIGNED - -	REVISED
	CHECKED - -	REVISED
PLOT SCALE = 10.0000 ' / in.	DRAWN - -	REVISED
PLOT DATE = 6/17/2020	CHECKED - -	REVISED

STATE OF ILLINOIS
DEPARTMENT OF TRANSPORTATION

EAST LOGAN STREET
CROSS SECTIONS

SCALE: 1" = 5' | SHEET 13 OF 14 SHEETS | STA. 608+00.00 TO STA. 608+50.00

F.A.U. RTE.	SECTION	COUNTY	TOTAL SHEETS	SHEET NO.
7448	09-00933-01-BR	MACON	572	530

CONTRACT NO. 6WGY(165)

ILLINOIS | FED. AID PROJECT

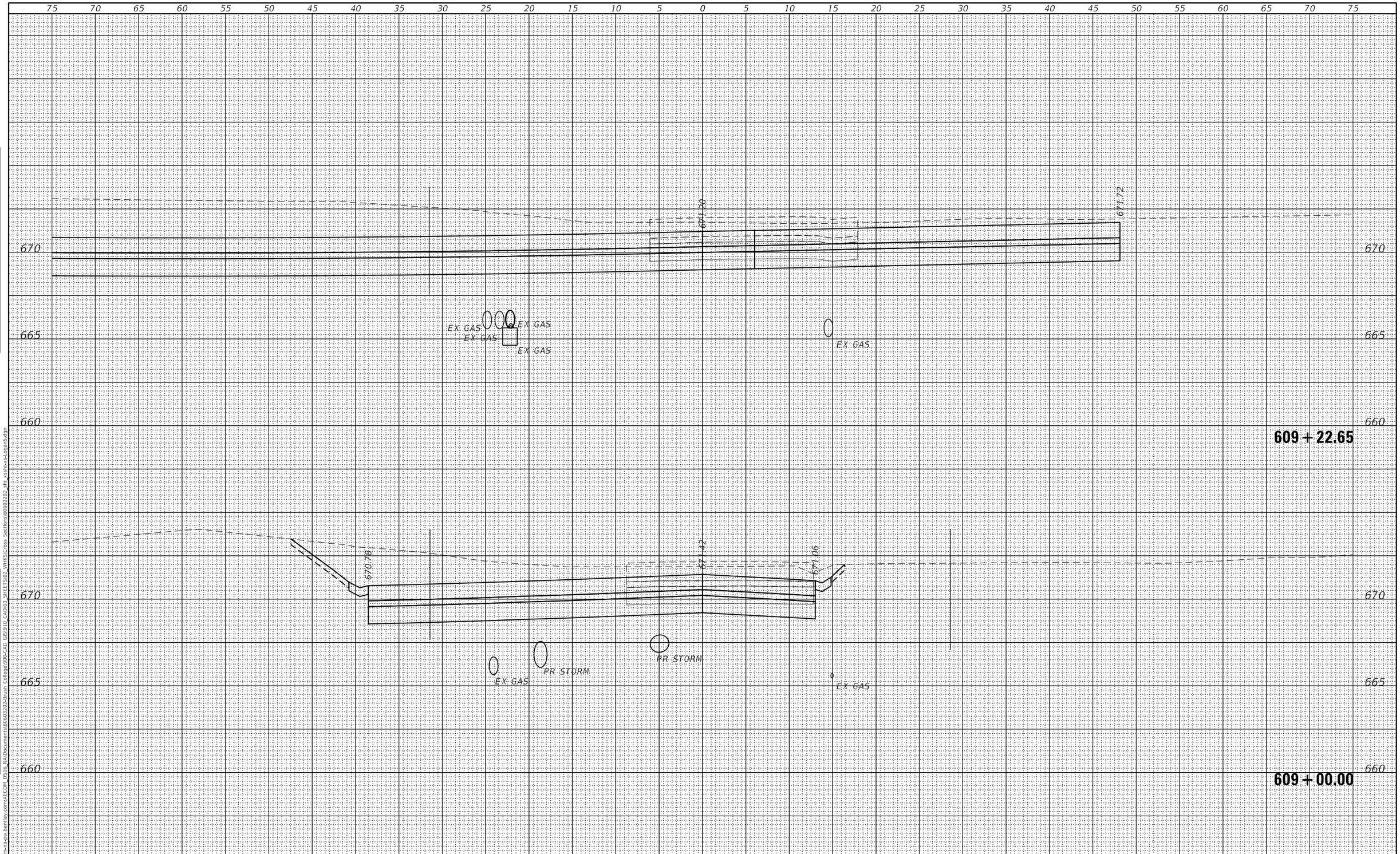

FINAL SURVEY		BY	DATE
	SURVEYED		
	PLOTTED		
NOTE BOOK	TEMPLATE		
	AREAS		
NO.	AREAS CHECKED		

ORIGINAL SURVEY		BY	DATE
	SURVEYED		
	PLOTTED		
NOTE BOOK	TEMPLATE		
	AREAS		
NO.	AREAS CHECKED		

MODEL: Default
FILE NAME: pw:\\aecom-na-sw.bentley.com:AECOM DS16 NA\Documents\60603202-Brush College90b-CAD GIS\910 CAD\03 SHEETS\02 VHKS\Cross Sections\60603202 sht xssht-xs-Logan5.dgn

design firm no. 184001036
whks
engineers + planners + land surveyors

USER NAME = $OPERATOR$	DESIGNED - -	REVISED
	CHECKED - -	REVISED
PLOT SCALE = 10.0000 ' / in.	DRAWN - -	REVISED
PLOT DATE = 6/17/2020	CHECKED - -	REVISED

STATE OF ILLINOIS
DEPARTMENT OF TRANSPORTATION

EAST LOGAN STREET
CROSS SECTIONS

SCALE: 1" = 5' | SHEET 14 OF 14 SHEETS | STA. 609+00.00 TO STA. 609+22.65

F.A.U. RTE.	SECTION	COUNTY	TOTAL SHEETS	SHEET NO.
7448	09-00933-01-BR	MACON	572	531

CONTRACT NO. 6WGY(165)

ILLINOIS | FED. AID PROJECT

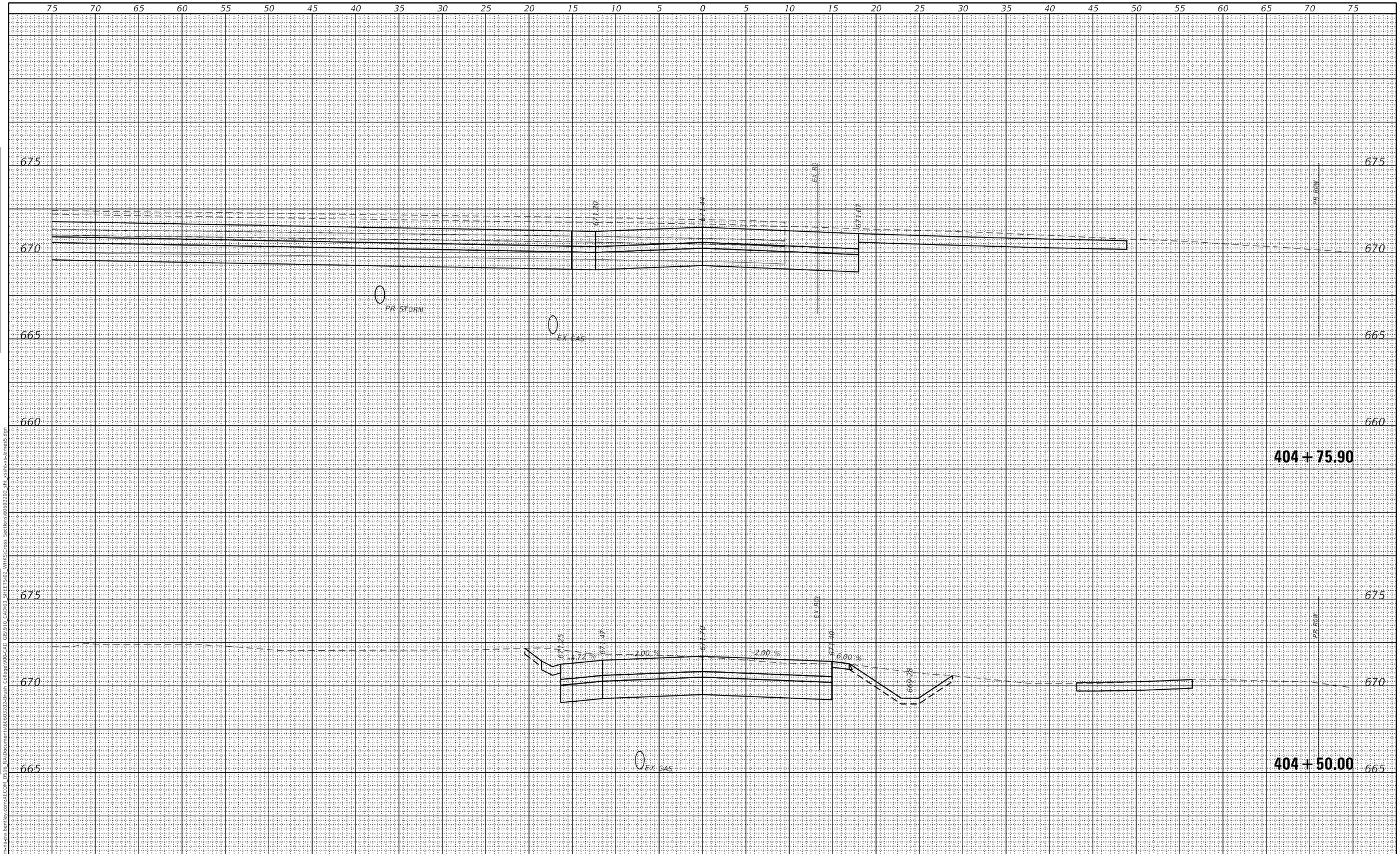

FINAL SURVEY		BY	DATE
NOTE BOOK	SURVEYED		
	PLOTTED		
	TEMPLATE		
	AREAS		
NO.	AREAS CHECKED		

ORIGINAL SURVEY		BY	DATE
NOTE BOOK	SURVEYED		
	PLOTTED		
	TEMPLATE		
	AREAS		
NO.	AREAS CHECKED		

MODEL: Default
FILE NAME: pw:\\aecom-na-pw.bentley.com:AECOM DS16 NA\Documents\60603202-Brush College90b-CAD GIS\910 CAD\03 SHEETS\02 VHKS\Cross Sections\60603202 sht xssht-xs-James5.dgn

design firm no. 184001036
whks
engineers + planners + land surveyors

USER NAME = $OPERATOR$	DESIGNED - -	REVISED
	CHECKED - -	REVISED
PLOT SCALE = 10.0000 ' / in.	DRAWN - -	REVISED
PLOT DATE = 6/17/2020	CHECKED - -	REVISED

STATE OF ILLINOIS
DEPARTMENT OF TRANSPORTATION

NORTH JAMES STREET
CROSS SECTIONS

SCALE: 1" = 5' | SHEET 1 OF 6 SHEETS | STA. 404+50.00 TO STA. 404+75.90

F.A.U. RTE.	SECTION	COUNTY	TOTAL SHEETS	SHEET NO.
7448	09-00933-01-BR	MACON	572	532

CONTRACT NO. 6WGY(165)

ILLINOIS | FED. AID PROJECT

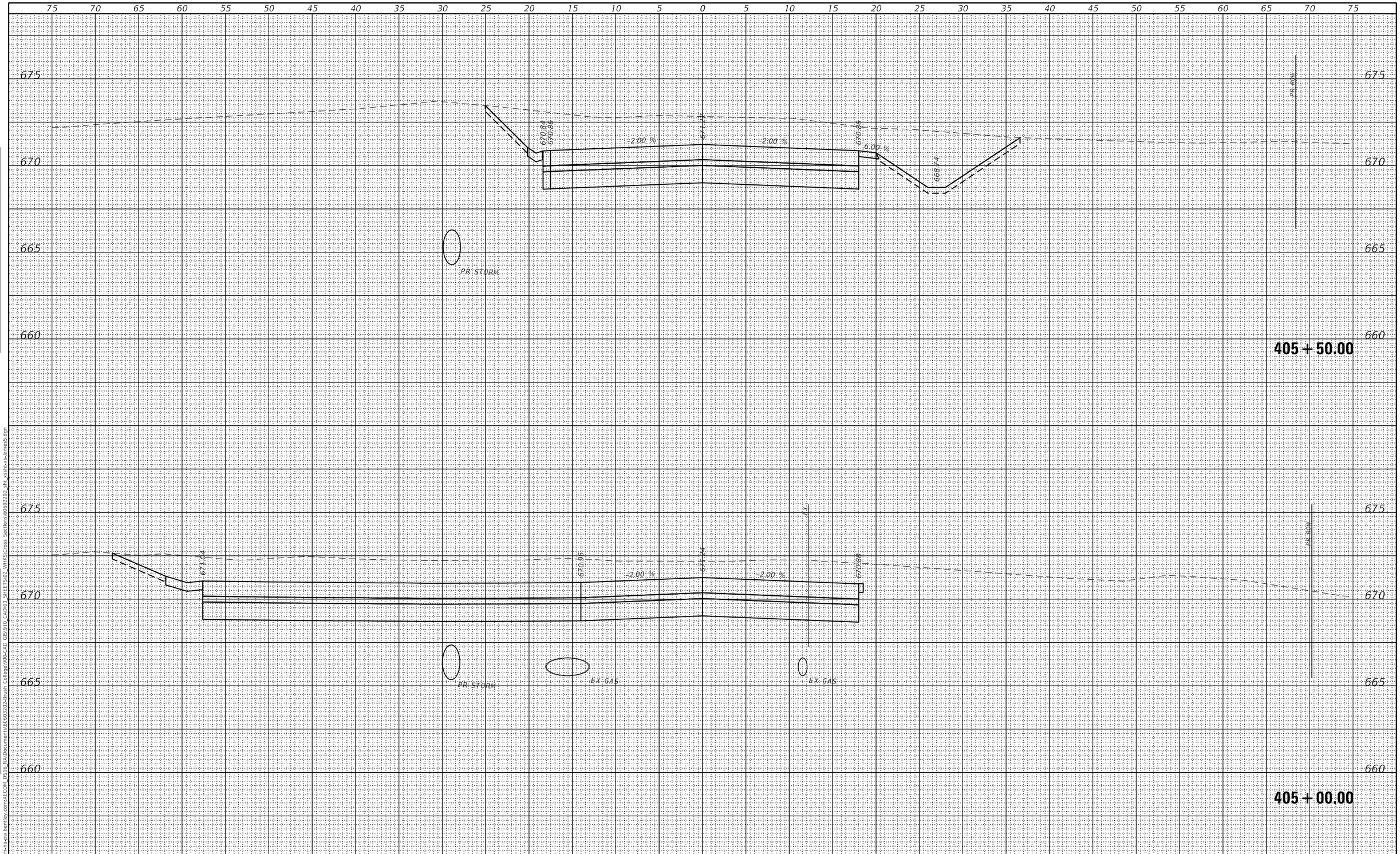

FINAL SURVEY		BY	DATE
NOTE BOOK	SURVEYED		
	PLOTTED		
	TEMPLATE		
	AREAS		
NO.	AREAS CHECKED		

ORIGINAL SURVEY		BY	DATE
NOTE BOOK	SURVEYED		
	PLOTTED		
	TEMPLATE		
	AREAS		
NO.	AREAS CHECKED		

MODEL: Default
FILE NAME: pw:\\aecom-na-sw.bentley.com:AECOM DS16 NA\Documents\60603202-Brush College90b-CAD GIS\910 CAD\03 SHEETS\02 VHKS\Cross Sections\60603202 sht xssht-vs-james5.dgn

design firm no. 184001036
whks
engineers + planners + land surveyors

USER NAME = $OPERATOR$	DESIGNED - -	REVISED	
	CHECKED - -	REVISED	
PLOT SCALE = 10.0000 ' / in.	DRAWN - -	REVISED	
PLOT DATE = 6/17/2020	CHECKED - -	REVISED	

STATE OF ILLINOIS
DEPARTMENT OF TRANSPORTATION

NORTH JAMES STREET
CROSS SECTIONS

SCALE: 1" = 5' | SHEET 2 OF 6 SHEETS | STA. 405+00.00 TO STA. 405+50.00

F.A.U. RTE.	SECTION	COUNTY	TOTAL SHEETS	SHEET NO.
7448	09-00933-01-BR	MACON	572	533

CONTRACT NO. 6WGY(165)
ILLINOIS | FED. AID PROJECT

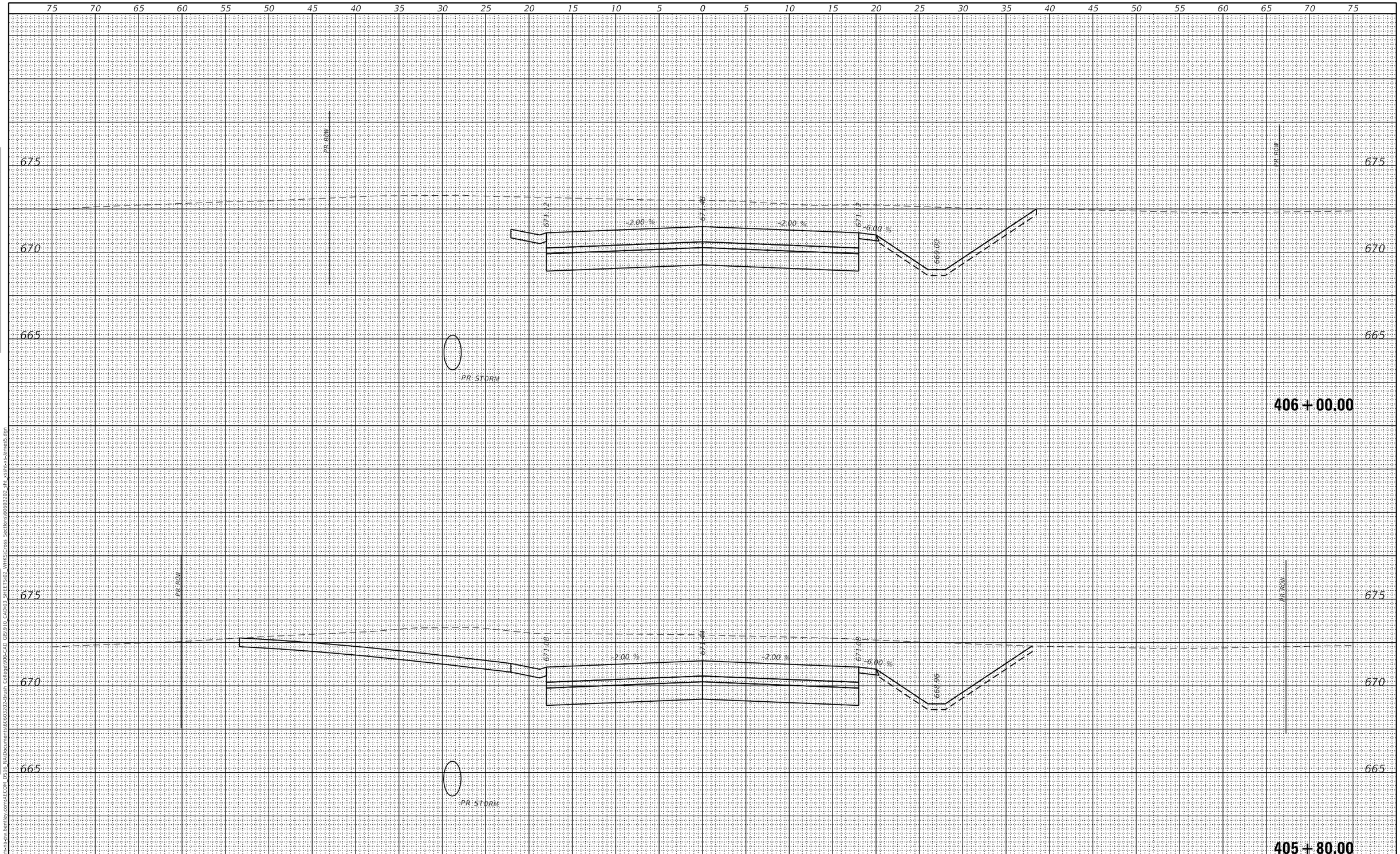

FINAL SURVEY		BY	DATE
	SURVEYED		
	PLOTTED		
NOTE BOOK	TEMPLATE		
	AREAS		
NO.	AREAS CHECKED		

ORIGINAL SURVEY		BY	DATE
	SURVEYED		
	PLOTTED		
NOTE BOOK	TEMPLATE		
	AREAS		
NO.	AREAS CHECKED		

MODEL: Default
FILE NAME: pw:\\aecom-na-pw.bentley.com:AECOM DS16 NA\Documents\60603202-Brush College90b-CAD GIS\910 CAD\03 SHEETS\02 VHKS\Cross Sections\60603202 sht xsshc-xs-James5.dgn

design firm no. 184001036
whks
engineers + planners + land surveyors

USER NAME = $OPERATOR$	DESIGNED - -	REVISED
	CHECKED - -	REVISED
PLOT SCALE = 10.0000 ' / in.	DRAWN - -	REVISED
PLOT DATE = 6/17/2020	CHECKED - -	REVISED

STATE OF ILLINOIS
DEPARTMENT OF TRANSPORTATION

NORTH JAMES STREET
CROSS SECTIONS

SCALE: 1" = 5' | SHEET 3 OF 6 SHEETS | STA. 405+80.00 TO STA. 406+00.00

F.A.U. RTE.	SECTION	COUNTY	TOTAL SHEETS	SHEET NO.
7448	09-00933-01-BR	MACON	572	534

CONTRACT NO. 6WGY(165)

ILLINOIS | FED. AID PROJECT

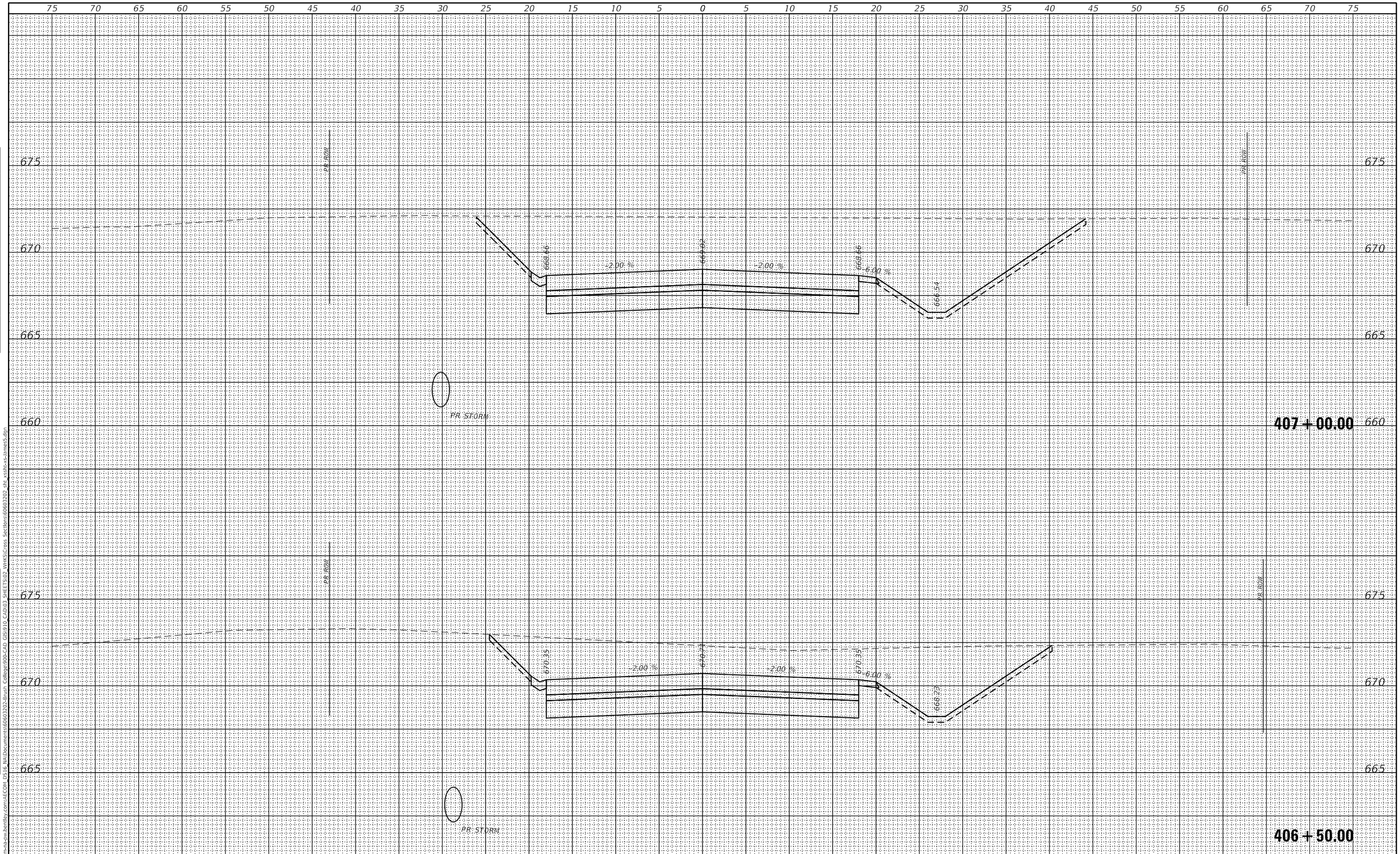

FINAL SURVEY		BY	DATE
NOTE BOOK	SURVEYED		
	PLOTTED		
	TEMPLATE		
	AREAS		
	AREAS CHECKED		
NO.			

ORIGINAL SURVEY		BY	DATE
NOTE BOOK	SURVEYED		
	PLOTTED		
	TEMPLATE		
	AREAS		
	AREAS CHECKED		
NO.			

MODEL: Default
FILE NAME: pw:\\aecom-na-pw.bentley.com:AECOM DS16 NA\Documents\60603202-Brush College90b-CAD GIS\910 CAD\03 SHEETS\02 VHKS\Cross Sections\60603202_sht_xssht-vs-jamesS.dgn

design firm no. 184001036
whks
engineers + planners + land surveyors

USER NAME = $OPERATOR$	DESIGNED - -	REVISED
	CHECKED - -	REVISED
PLOT SCALE = 10.0000 ' / in.	DRAWN - -	REVISED
PLOT DATE = 6/17/2020	CHECKED - -	REVISED

STATE OF ILLINOIS
DEPARTMENT OF TRANSPORTATION

NORTH JAMES STREET
CROSS SECTIONS

SCALE: 1" = 5' | SHEET 4 OF 6 SHEETS | STA. 406+50.00 TO STA. 407+00.00

F.A.U. RTE.	SECTION	COUNTY	TOTAL SHEETS	SHEET NO.
7448	09-00933-01-BR	MACON	572	535

CONTRACT NO. 6WGY(165)

ILLINOIS | FED. AID PROJECT

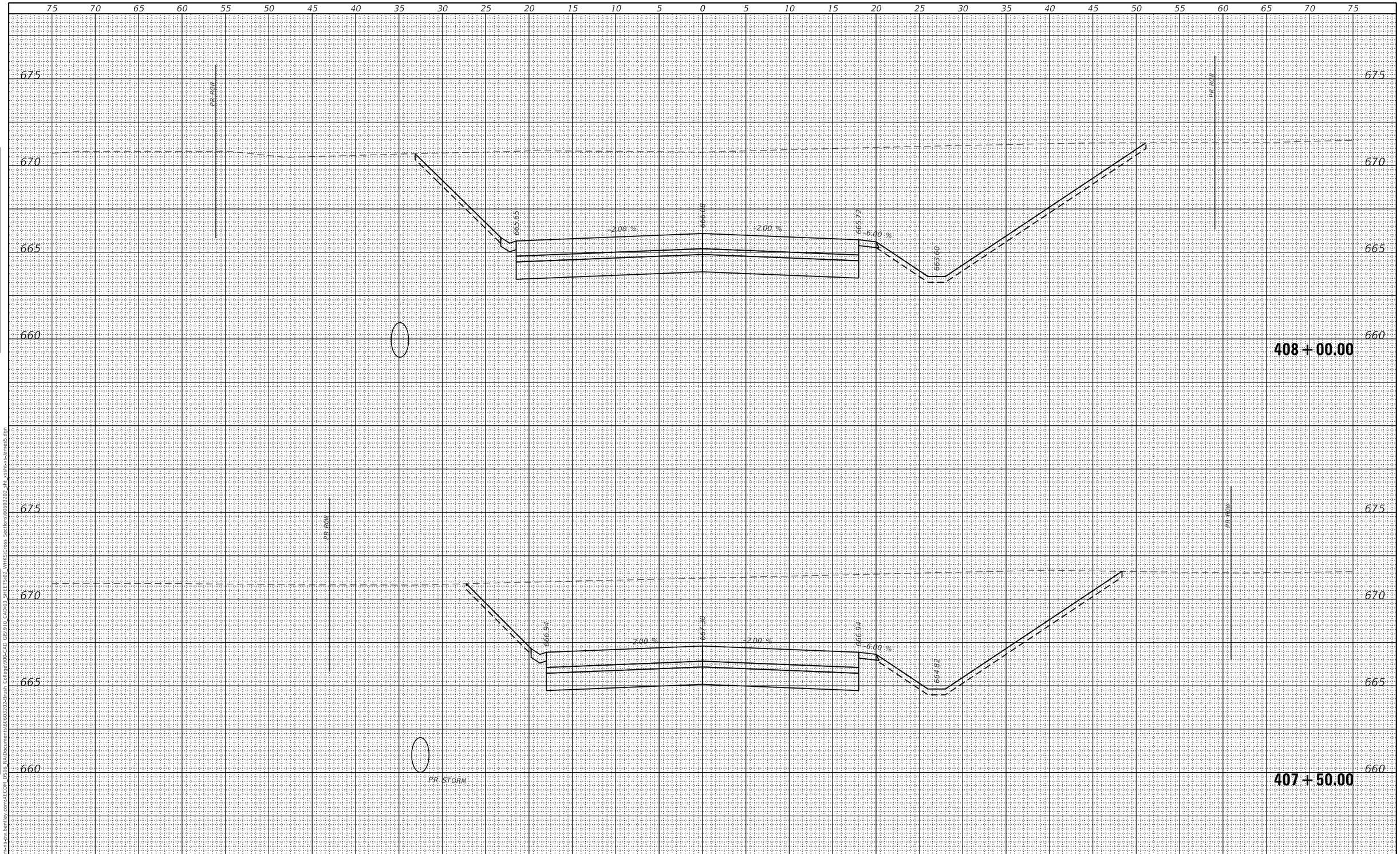

FINAL SURVEY		BY	DATE
NOTE BOOK	SURVEYED		
	PLOTTED		
	TEMPLATE		
	AREAS		
NO.	AREAS CHECKED		

ORIGINAL SURVEY		BY	DATE
NOTE BOOK	SURVEYED		
	PLOTTED		
	TEMPLATE		
	AREAS		
NO.	AREAS CHECKED		

MODEL: Default
FILE NAME: pw:\\aecom-na-pw.bentley.com:AECOM DS16 NA\Documents\60603202-Brush College90b-CAD GIS\910 CAD\03 SHEETS\02 VHKS\Cross Sections\60603202 sht xssht-xs-James5.dgn

design firm no. 184001036
whks
engineers + planners + land surveyors

USER NAME = $OPERATOR$	DESIGNED - -	REVISED
	CHECKED - -	REVISED
PLOT SCALE = 10.0000 ' / in.	DRAWN - -	REVISED
PLOT DATE = 6/17/2020	CHECKED - -	REVISED

STATE OF ILLINOIS
DEPARTMENT OF TRANSPORTATION

NORTH JAMES STREET
CROSS SECTIONS

SCALE: 1" = 5' | SHEET 5 OF 6 SHEETS | STA. 407+50.00 TO STA. 408+00.00

F.A.U. RTE.	SECTION	COUNTY	TOTAL SHEETS	SHEET NO.
7448	09-00933-01-BR	MACON	572	536

CONTRACT NO. 6WGY(165)
ILLINOIS | FED. AID PROJECT

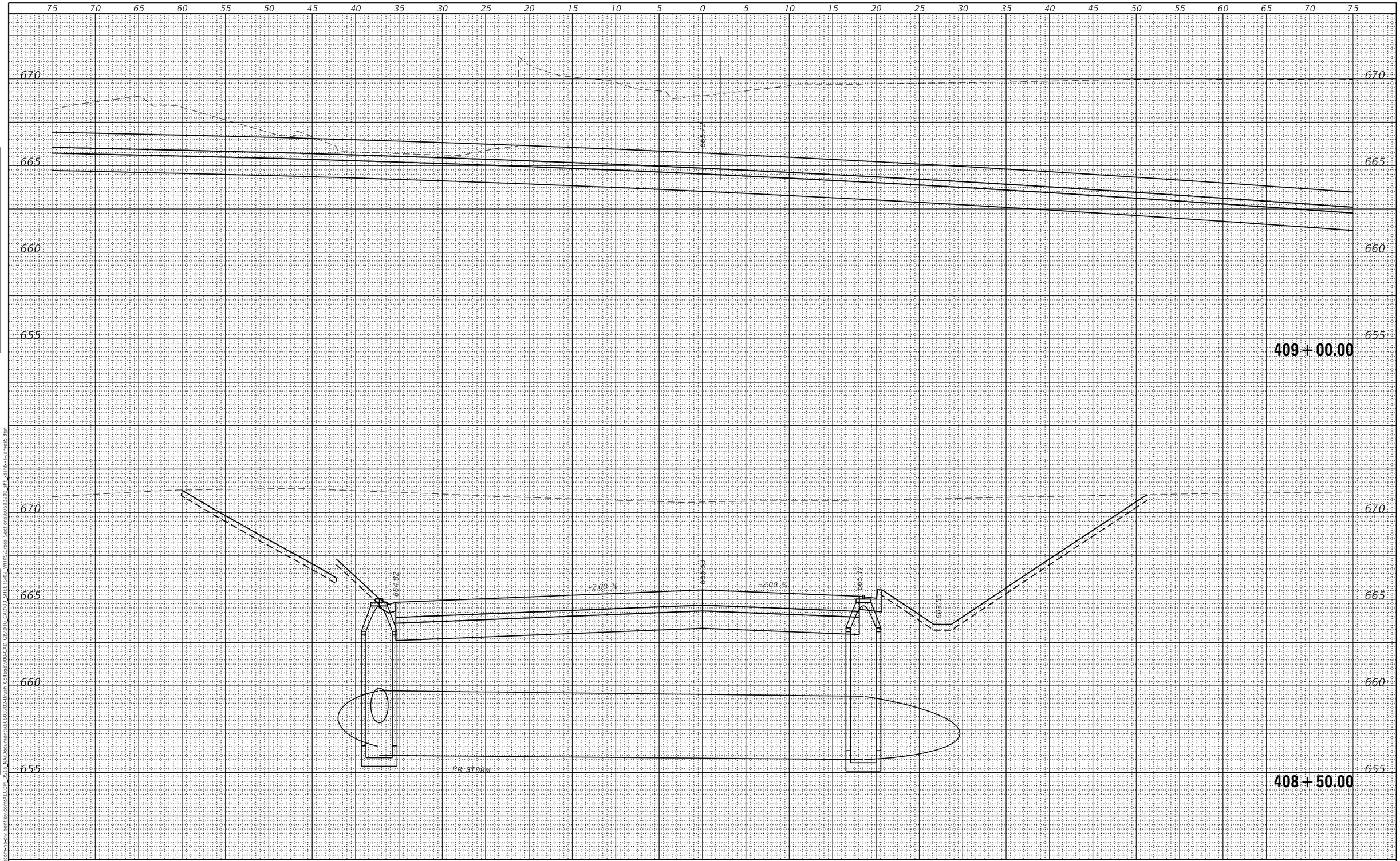

FINAL SURVEY		BY	DATE
	SURVEYED		
	PLOTTED		
	TEMPLATE		
NOTE BOOK	AREAS		
	AREAS CHECKED		
NO.			

ORIGINAL SURVEY		BY	DATE
	SURVEYED		
	PLOTTED		
	TEMPLATE		
NOTE BOOK	AREAS		
	AREAS CHECKED		
NO.			

MODEL: Default
FILE NAME: pw:\\aecom-na-pw.bentley.com:AECOM DS16 NA\Documents\60603202-Brush College90b-CAD GIS\910 CAD\03 SHEETS\02 VHKS\Cross Sections\60603202 sht xssht-xs-James5.dgn

design firm no. 184001036
whks
engineers + planners + land surveyors

USER NAME = $OPERATOR$	DESIGNED - -	REVISED	
	CHECKED - -	REVISED	
PLOT SCALE = 10.0000 ' / in.	DRAWN - -	REVISED	
PLOT DATE = 6/17/2020	CHECKED - -	REVISED	

STATE OF ILLINOIS
DEPARTMENT OF TRANSPORTATION

NORTH JAMES STREET
CROSS SECTIONS

SCALE: 1" = 5' | SHEET 6 OF 6 SHEETS | STA. 408+50.00 TO STA. 409+00.00

F.A.U. RTE.	SECTION	COUNTY	TOTAL SHEETS	SHEET NO.
7448	09-00933-01-BR	MACON	572	537

CONTRACT NO. 6WGY(165)

ILLINOIS | FED. AID PROJECT

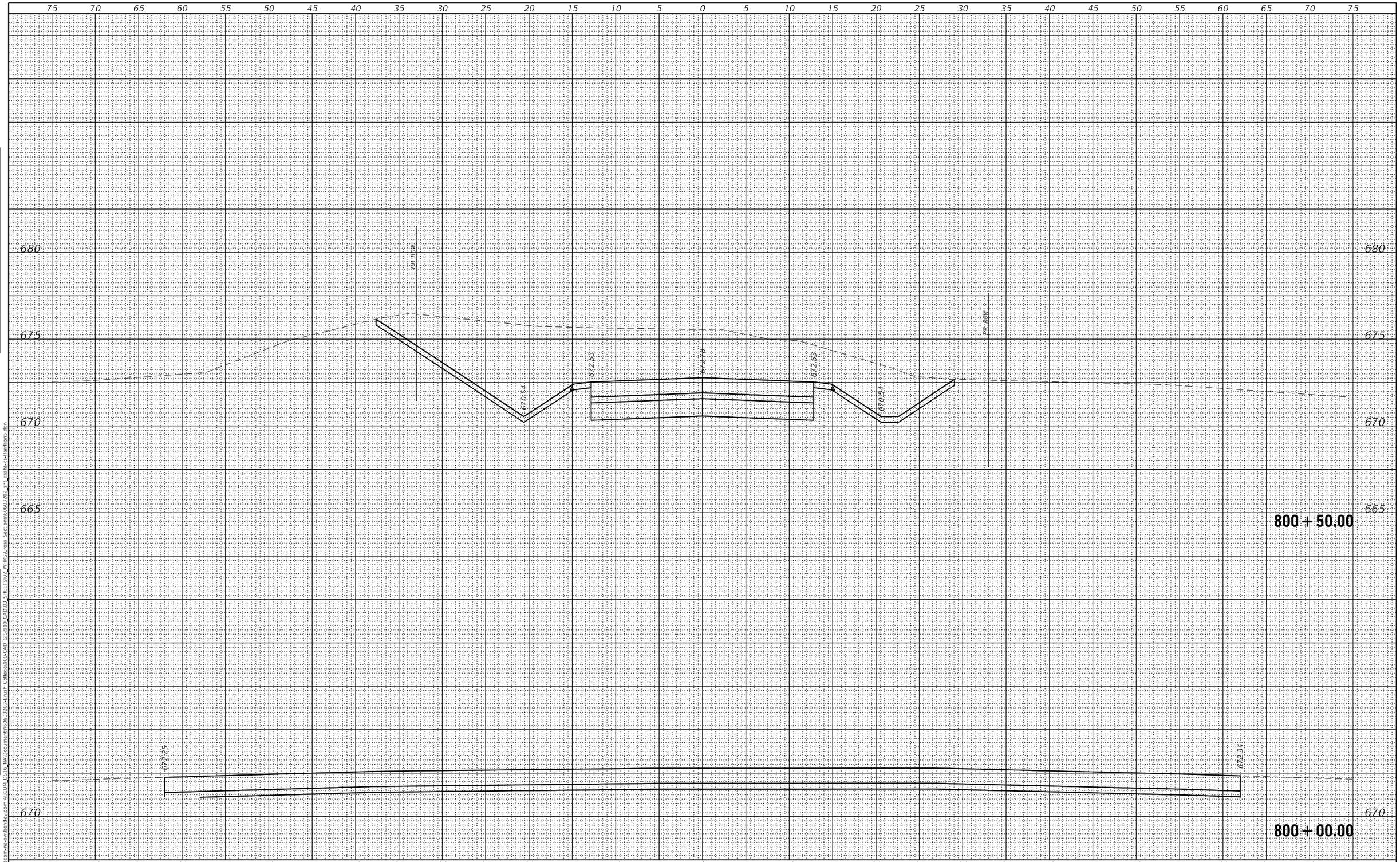

FINAL SURVEY		BY	DATE
	SURVEYED		
	PLOTTED		
NOTE BOOK	TEMPLATE		
	AREAS		
NO.	AREAS CHECKED		

ORIGINAL SURVEY		BY	DATE
	SURVEYED		
	PLOTTED		
NOTE BOOK	TEMPLATE		
	AREAS		
NO.	AREAS CHECKED		

MODEL: Default
FILE NAME: pw:\\aecom-na-pw.bentley.com:AECOM DS16 NA\Documents\60603202-Brush College90b-CAD GIS\910 CAD\03 SHEETS\02 VHKS\Cross Sections\60603202 sht xsshc-xs-harrison5.dgn

design firm no. 184001036
whks
engineers + planners + land surveyors

USER NAME = $OPERATOR$	DESIGNED - -	REVISED
	CHECKED - -	REVISED
PLOT SCALE = 10.0000 ' / in.	DRAWN - -	REVISED
PLOT DATE = 6/17/2020	CHECKED - -	REVISED

STATE OF ILLINOIS
DEPARTMENT OF TRANSPORTATION

E HARRISON AVENUE (WEST LEG)
CROSS SECTIONS

SCALE: 1" = 5' | SHEET 1 OF 13 SHEETS | STA. 800+00.00 TO STA. 800+50.00

F.A.U. RTE.	SECTION	COUNTY	TOTAL SHEETS	SHEET NO.
7448	09-00933-01-BR	MACON	572	538

CONTRACT NO. 6WGY(165)

ILLINOIS | FED. AID PROJECT

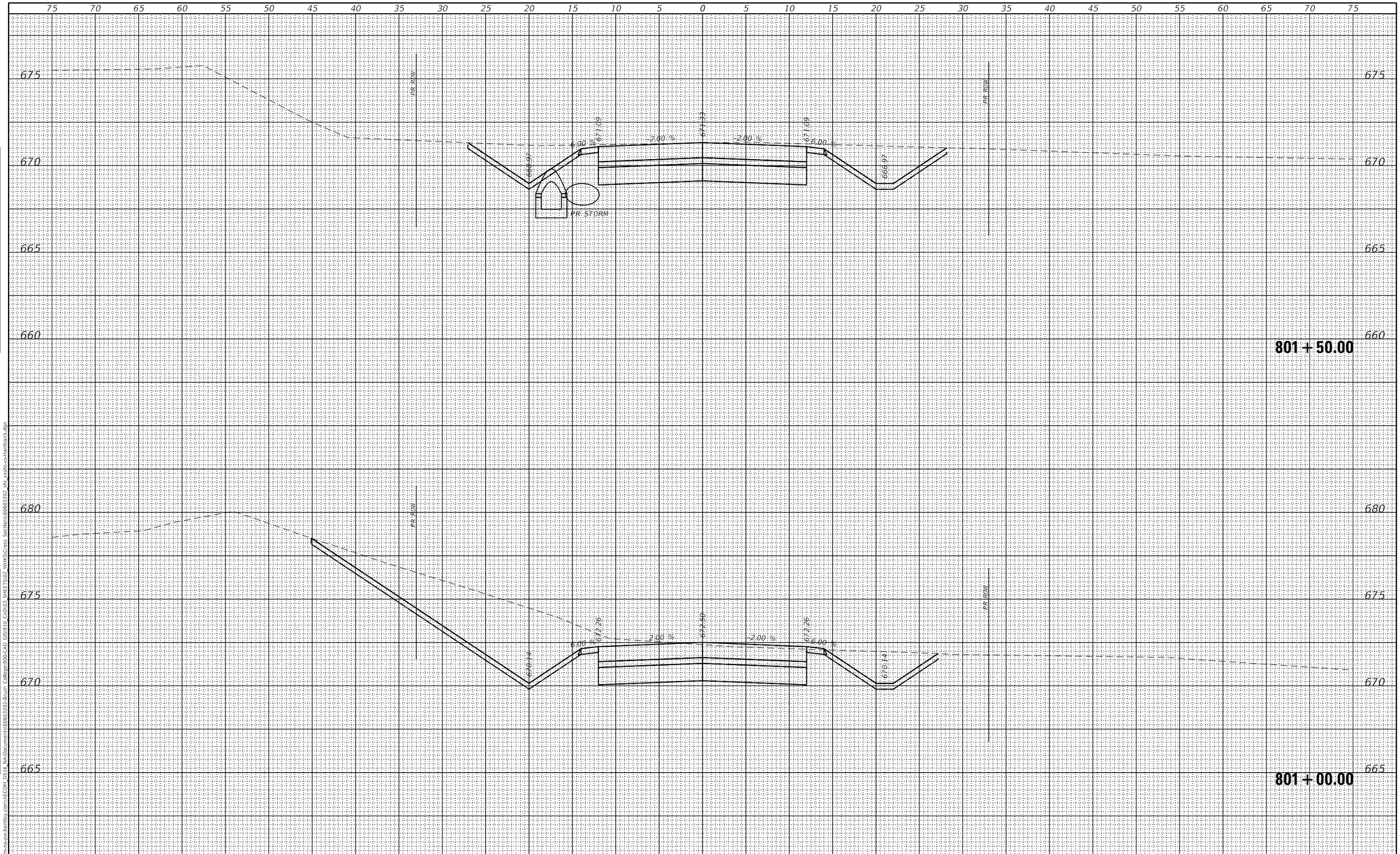

FINAL SURVEY		BY	DATE
	SURVEYED		
	PLOTTED		
	TEMPLATE		
NOTE BOOK	AREAS		
	AREAS CHECKED		
NO.			

ORIGINAL SURVEY		BY	DATE
	SURVEYED		
	PLOTTED		
	TEMPLATE		
NOTE BOOK	AREAS		
	AREAS CHECKED		
NO.			

MODEL: Default
FILE NAME: pw:\\aecom-na-pw.bentley.com:AECOM DS16 NA\Documents\60603202-Brush College90b-CAD GIS\910 CAD\03 SHEETS\02 VHKS\Cross Sections\60603202 sht xsshc-xs-Harrison5.dgn

design firm no. 184001036
whks
engineers + planners + land surveyors

USER NAME = $OPERATOR$	DESIGNED - -	REVISED
	CHECKED - -	REVISED
PLOT SCALE = 10.0000 ' / in.	DRAWN - -	REVISED
PLOT DATE = 6/17/2020	CHECKED - -	REVISED

STATE OF ILLINOIS
DEPARTMENT OF TRANSPORTATION

E HARRISON AVENUE (WEST LEG)
CROSS SECTIONS

SCALE: 1" = 5' | SHEET 2 OF 13 SHEETS | STA. 801+00.00 TO STA. 801+50.00

F.A.U. RTE.	SECTION	COUNTY	TOTAL SHEETS	SHEET NO.
7448	09-00933-01-BR	MACON	572	539

CONTRACT NO. 6WGY(165)

ILLINOIS | FED. AID PROJECT

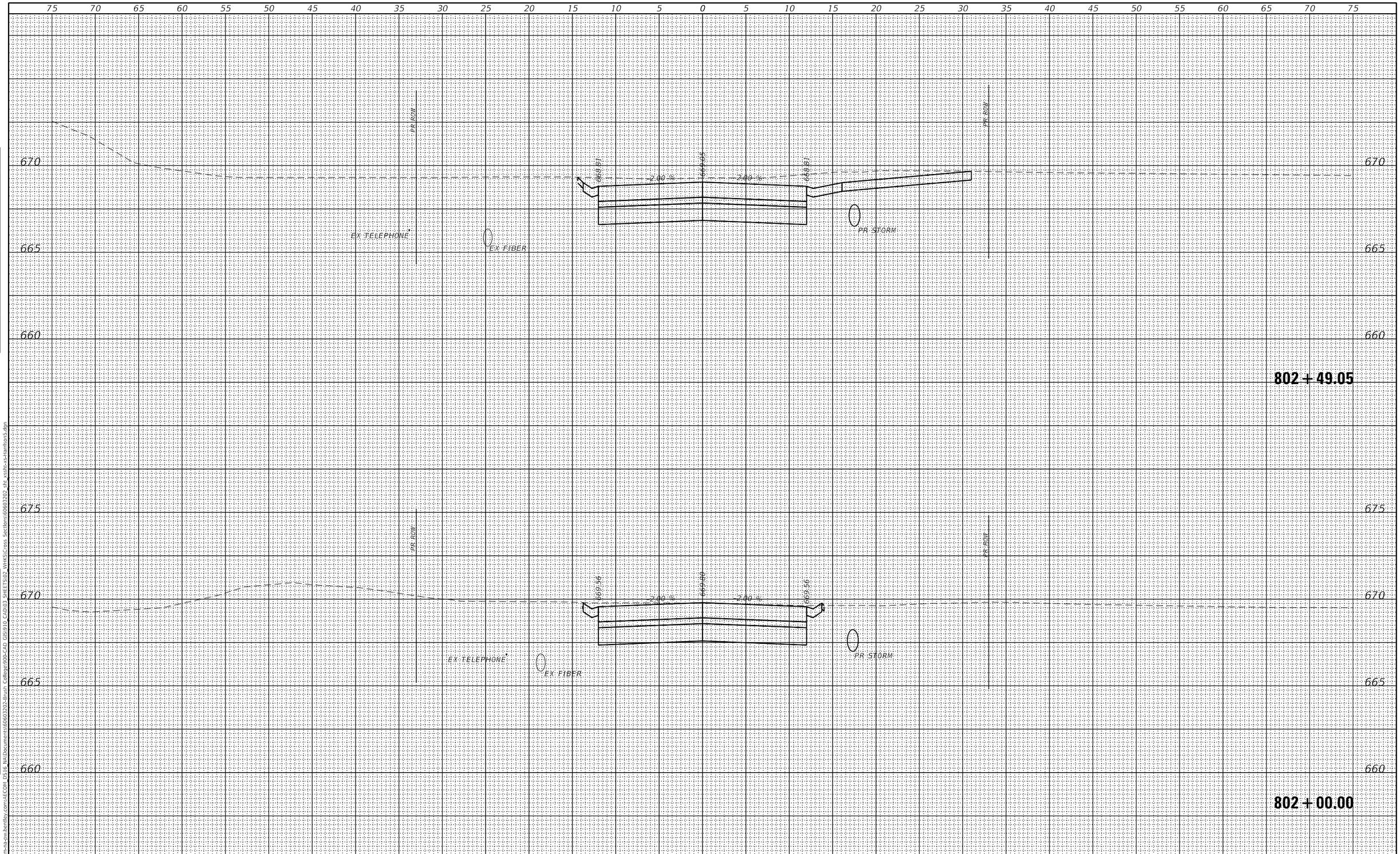

FINAL SURVEY		BY	DATE
	SURVEYED		
	PLOTTED		
NOTE BOOK	TEMPLATE		
	AREAS		
	AREAS CHECKED		
NO.			

ORIGINAL SURVEY		BY	DATE
	SURVEYED		
	PLOTTED		
NOTE BOOK	TEMPLATE		
	AREAS		
	AREAS CHECKED		
NO.			

MODEL: Default
FILE NAME: pw:\\aecom-na-sw.bentley.com:AECOM DS16 NA\Documents\60603202-Brush College 90b-CAD GIS\910 CAD\03 SHEETS\02 VHKS\Cross Sections\60603202 sht xssht-xs-harrison5.dgn

design firm no. 184001036
whks
engineers + planners + land surveyors

USER NAME = $OPERATOR$	DESIGNED - -	REVISED	
	CHECKED - -	REVISED	
PLOT SCALE = 10.0000 ' / in.	DRAWN - -	REVISED	
PLOT DATE = 6/17/2020	CHECKED - -	REVISED	

STATE OF ILLINOIS
DEPARTMENT OF TRANSPORTATION

E HARRISON AVENUE (WEST LEG)
CROSS SECTIONS

SCALE: 1" = 5' | SHEET 3 OF 13 SHEETS | STA. 802+00.00 TO STA. 802+49.05

F.A.U. RTE.	SECTION	COUNTY	TOTAL SHEETS	SHEET NO.
7448	09-00933-01-BR	MACON	572	540

CONTRACT NO. 6WGY(165)

ILLINOIS | FED. AID PROJECT

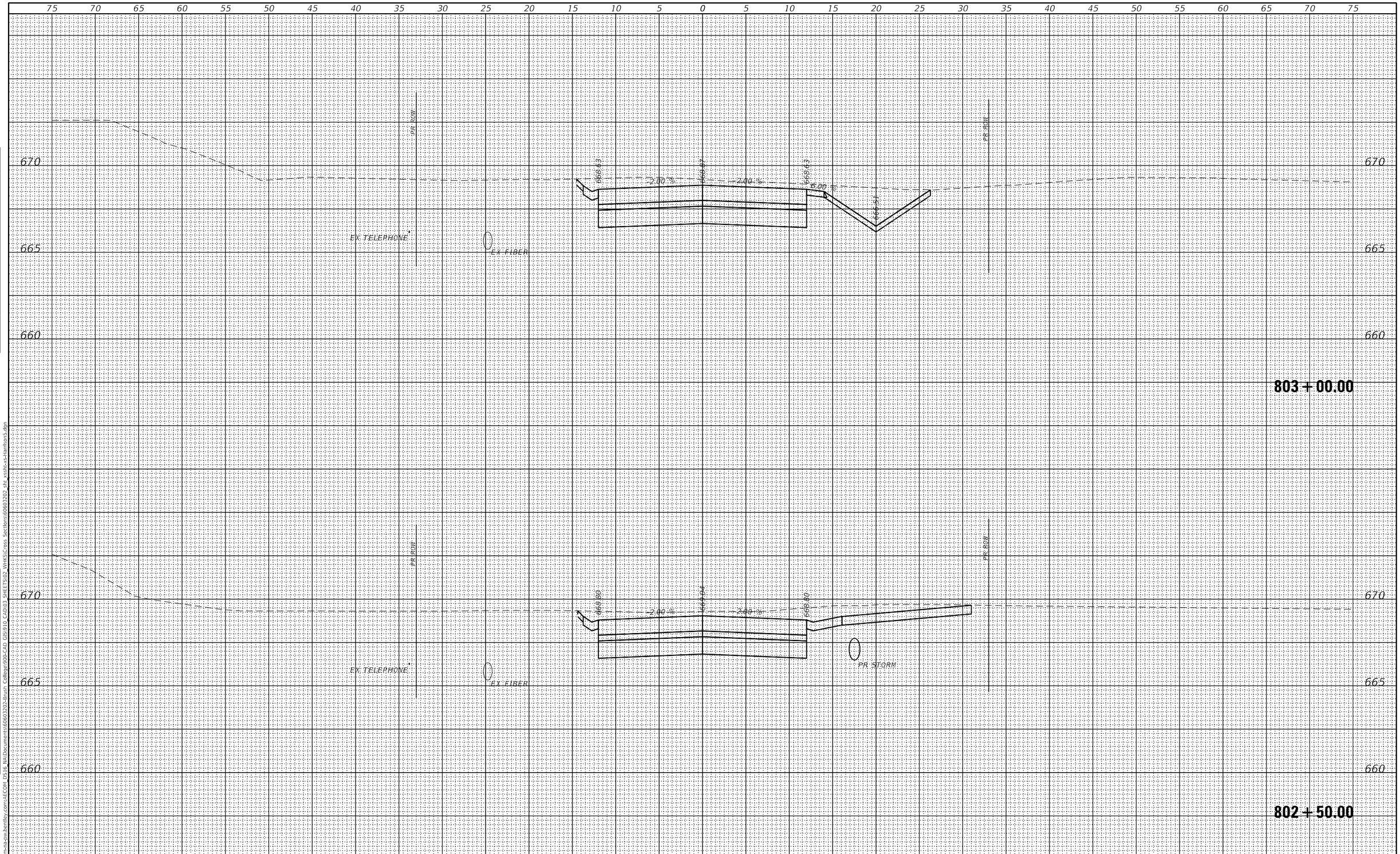

FINAL SURVEY		BY	DATE
	SURVEYED		
	PLOTTED		
NOTE BOOK	TEMPLATE		
	AREAS		
NO.	AREAS CHECKED		

ORIGINAL SURVEY		BY	DATE
	SURVEYED		
	PLOTTED		
NOTE BOOK	TEMPLATE		
	AREAS		
NO.	AREAS CHECKED		

MODEL: Default
FILE NAME: pw:\\aecom-na-pw.bentley.com:AECOM DS16 NA\Documents\60603202-Brush College90b-CAD GIS\910 CAD\03 SHEETS\02 VWHKS\Cross Sections\60603202 sht xsshc-xs-harrison5.dgn

design firm no. 184001036
whks
engineers + planners + land surveyors

USER NAME = $OPERATOR$	DESIGNED - -	REVISED
	CHECKED - -	REVISED
PLOT SCALE = 10.0000 ' / in.	DRAWN - -	REVISED
PLOT DATE = 6/17/2020	CHECKED - -	REVISED

STATE OF ILLINOIS
DEPARTMENT OF TRANSPORTATION

E HARRISON AVENUE (WEST LEG)
CROSS SECTIONS

SCALE: 1" = 5' | SHEET 4 OF 13 SHEETS | STA. 802+50.00 TO STA. 803+00.00

F.A.U. RTE.	SECTION	COUNTY	TOTAL SHEETS	SHEET NO.
7448	09-00933-01-BR	MACON	572	541

CONTRACT NO. 6WGY(165)

ILLINOIS | FED. AID PROJECT

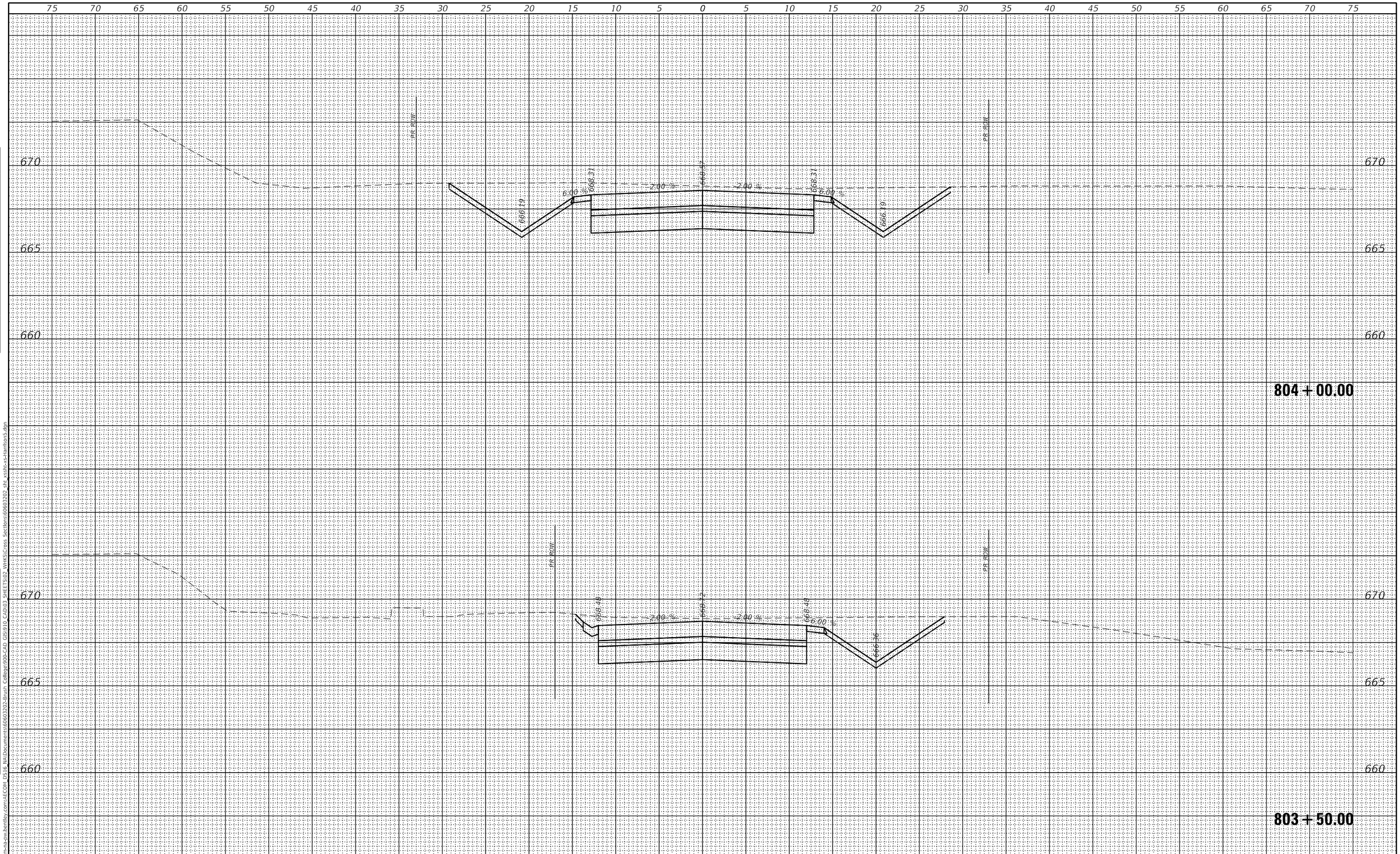

FINAL SURVEY		BY	DATE
NOTE BOOK	SURVEYED		
	PLOTTED		
	TEMPLATE		
	AREAS		
NO.	AREAS CHECKED		

ORIGINAL SURVEY		BY	DATE
NOTE BOOK	SURVEYED		
	PLOTTED		
	TEMPLATE		
	AREAS		
NO.	AREAS CHECKED		

MODEL: Default
FILE NAME: pw:\\aecom-na-sw.bentley.com:AECOM DS16 NA\Documents\60603202-Brush College90b-CAD GIS\910 CAD\03 SHEETS\02 VHKS\Cross Sections\60603202 sht xsshc-xs-harrison5.dgn

design firm no. 184001036
whks
engineers + planners + land surveyors

USER NAME = $OPERATOR$	DESIGNED - -	REVISED
	CHECKED - -	REVISED
PLOT SCALE = 10.0000 ' / in.	DRAWN - -	REVISED
PLOT DATE = 6/17/2020	CHECKED - -	REVISED

STATE OF ILLINOIS
DEPARTMENT OF TRANSPORTATION

E HARRISON AVENUE (WEST LEG)
CROSS SECTIONS

SCALE: 1" = 5' | SHEET 5 OF 13 SHEETS | STA. 803+50.00 TO STA. 804+00.00

F.A.U. RTE.	SECTION	COUNTY	TOTAL SHEETS	SHEET NO.
7448	09-00933-01-BR	MACON	572	542

CONTRACT NO. 6WGY(165)

ILLINOIS | FED. AID PROJECT

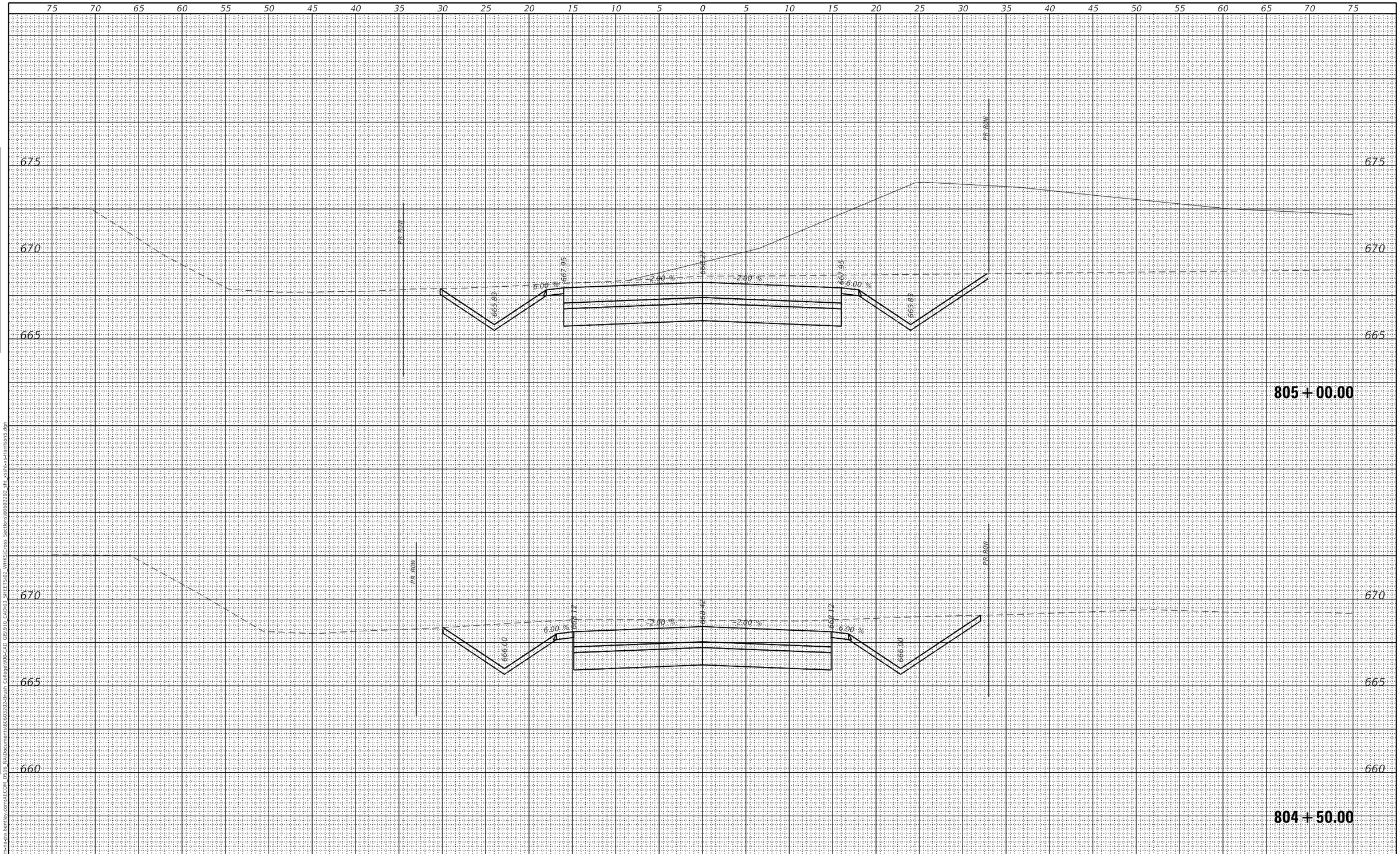

FINAL SURVEY		BY	DATE
	SURVEYED		
	PLOTTED		
NOTE BOOK	TEMPLATE		
	AREAS		
NO.	AREAS CHECKED		

ORIGINAL SURVEY		BY	DATE
	SURVEYED		
	PLOTTED		
NOTE BOOK	TEMPLATE		
	AREAS		
NO.	AREAS CHECKED		

MODEL: Default
FILE NAME: pw:\\aecom-na-sw.bentley.com:AECOM DS16 NA\Documents\60603202-Brush College90b-CAD GIS\910 CAD\03 SHEETS\02 VHKS\Cross Sections\60603202 sht xssh-xs-harrison5.dgn

design firm no. 184001036
whks
engineers + planners + land surveyors

USER NAME = $OPERATOR$	DESIGNED - -	REVISED
	CHECKED - -	REVISED
PLOT SCALE = 10.0000 ' / in.	DRAWN - -	REVISED
PLOT DATE = 6/17/2020	CHECKED - -	REVISED

STATE OF ILLINOIS
DEPARTMENT OF TRANSPORTATION

E HARRISON AVENUE (WEST LEG)
CROSS SECTIONS

SCALE: 1" = 5' | SHEET 6 OF 13 SHEETS | STA. 804+50.00 TO STA. 805+00.00

F.A.U. RTE.	SECTION	COUNTY	TOTAL SHEETS	SHEET NO.
7448	09-00933-01-BR	MACON	572	543

CONTRACT NO. 6WGY(165)

ILLINOIS | FED. AID PROJECT

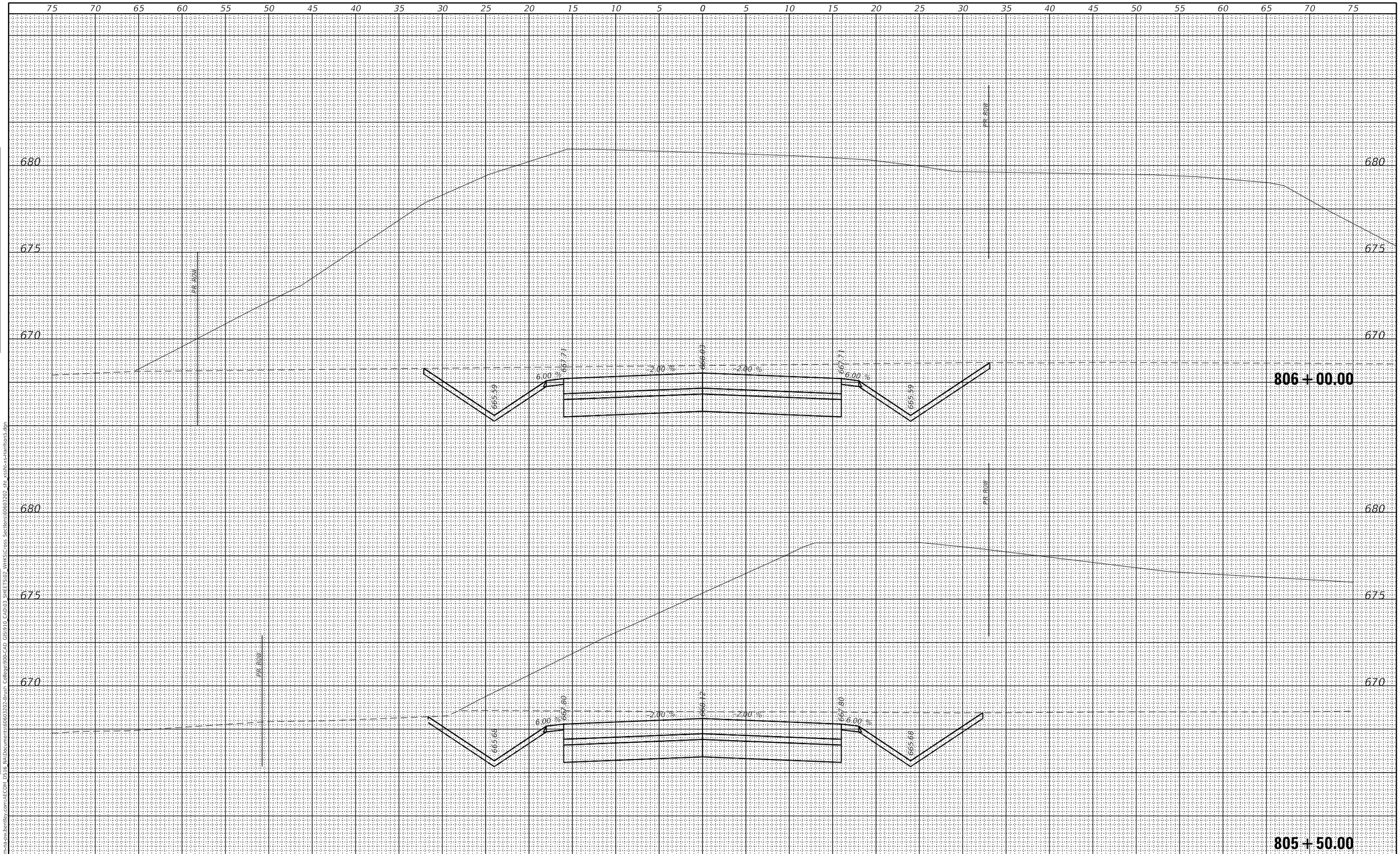

FINAL SURVEY	BY	DATE
SURVEYED		
PLOTTED		
TEMPLATE		
AREAS		
AREAS CHECKED		

NOTE BOOK
NO.

ORIGINAL SURVEY	BY	DATE
SURVEYED		
PLOTTED		
TEMPLATE		
AREAS		
AREAS CHECKED		

NOTE BOOK
NO.

MODEL: Default
FILE NAME: pw:\\aecom-na-pw.bentley.com:AECOM DS16 NA\Documents\60603202-Brush College90b-CAD GIS\910 CAD\03 SHEETS\02 VHKS\Cross Sections\60603202 sht xssht-xs-harrison5.dgn

design firm no. 184001036
whks
engineers + planners + land surveyors

USER NAME = $OPERATOR$	DESIGNED - -	REVISED	
	CHECKED - -	REVISED	
PLOT SCALE = 10.0000 ' / in.	DRAWN - -	REVISED	
PLOT DATE = 6/17/2020	CHECKED - -	REVISED	

STATE OF ILLINOIS
DEPARTMENT OF TRANSPORTATION

E HARRISON AVENUE (WEST LEG)
CROSS SECTIONS

SCALE: 1" = 5' | SHEET 7 OF 13 SHEETS | STA. 805+50.00 TO STA. 806+00.00

F.A.U. RTE.	SECTION	COUNTY	TOTAL SHEETS	SHEET NO.
7448	09-00933-01-BR	MACON	572	544

CONTRACT NO. 6WGY(165)

ILLINOIS | FED. AID PROJECT

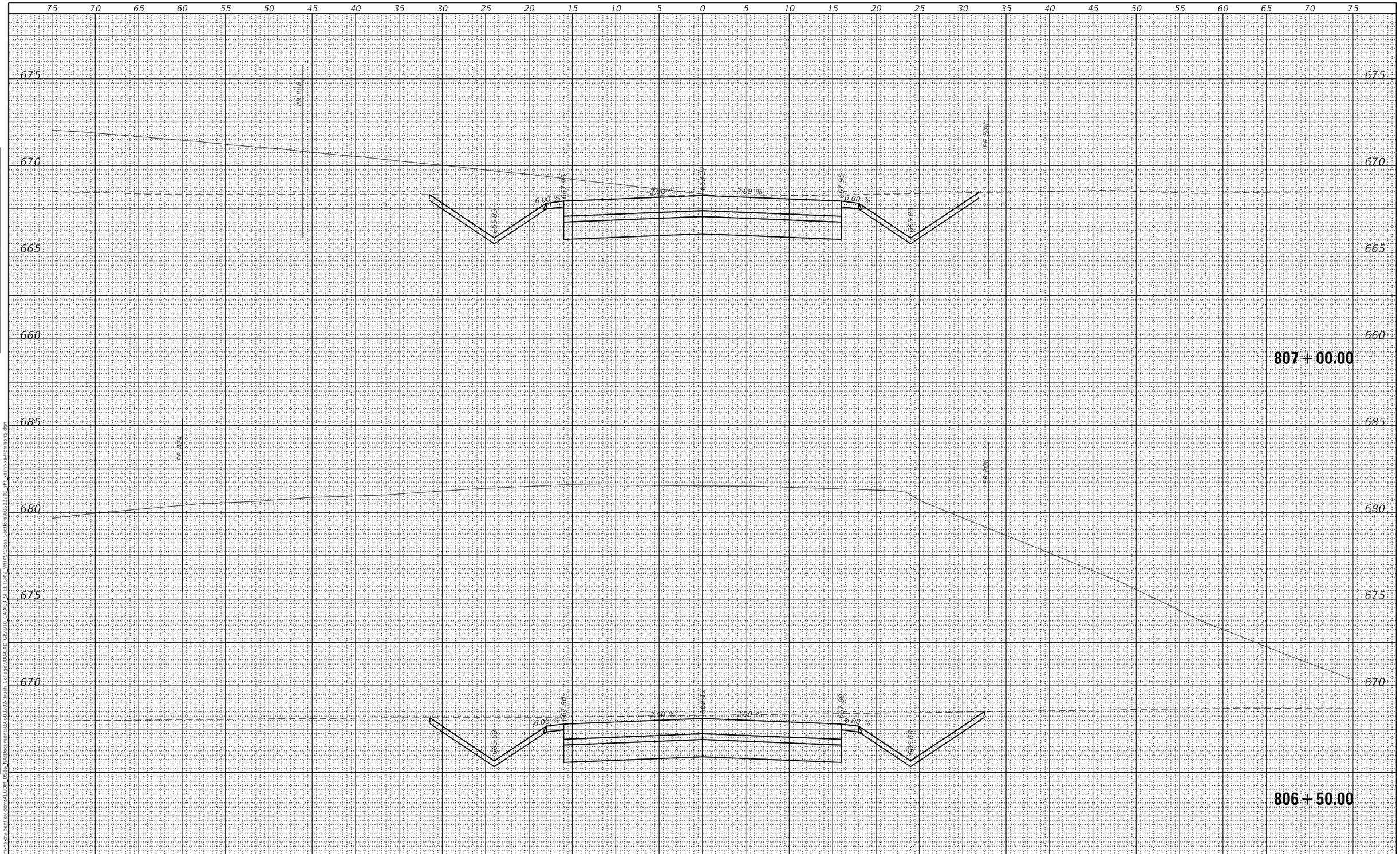

FINAL SURVEY		BY	DATE
	SURVEYED		
	PLOTTED		
NOTE BOOK	TEMPLATE		
	AREAS		
NO.	AREAS CHECKED		

ORIGINAL SURVEY		BY	DATE
	SURVEYED		
	PLOTTED		
NOTE BOOK	TEMPLATE		
	AREAS		
NO.	AREAS CHECKED		

MODEL: Default
FILE NAME: pw:\\aecom-na-sw.bentley.com:AECOM DS16 NA\Documents\60603202-Brush College90b-CAD GIS\910 CAD\03 SHEETS\02 VHKS\Cross Sections\60603202 sht xssht-xs-tlantion5.dgn

design firm no. 184001036
whks
engineers + planners + land surveyors

USER NAME = $OPERATOR$	DESIGNED - -	REVISED	
	CHECKED - -	REVISED	
PLOT SCALE = 10.0000 ' / in.	DRAWN - -	REVISED	
PLOT DATE = 6/17/2020	CHECKED - -	REVISED	

STATE OF ILLINOIS
DEPARTMENT OF TRANSPORTATION

E HARRISON AVENUE (WEST LEG)
CROSS SECTIONS

SCALE: 1" = 5' | SHEET 8 OF 13 SHEETS | STA. 806+50.00 TO STA. 807+00.00

F.A.U. RTE.	SECTION	COUNTY	TOTAL SHEETS	SHEET NO.
7448	09-00933-01-BR	MACON	572	545

CONTRACT NO. 6WGY(165)

ILLINOIS | FED. AID PROJECT

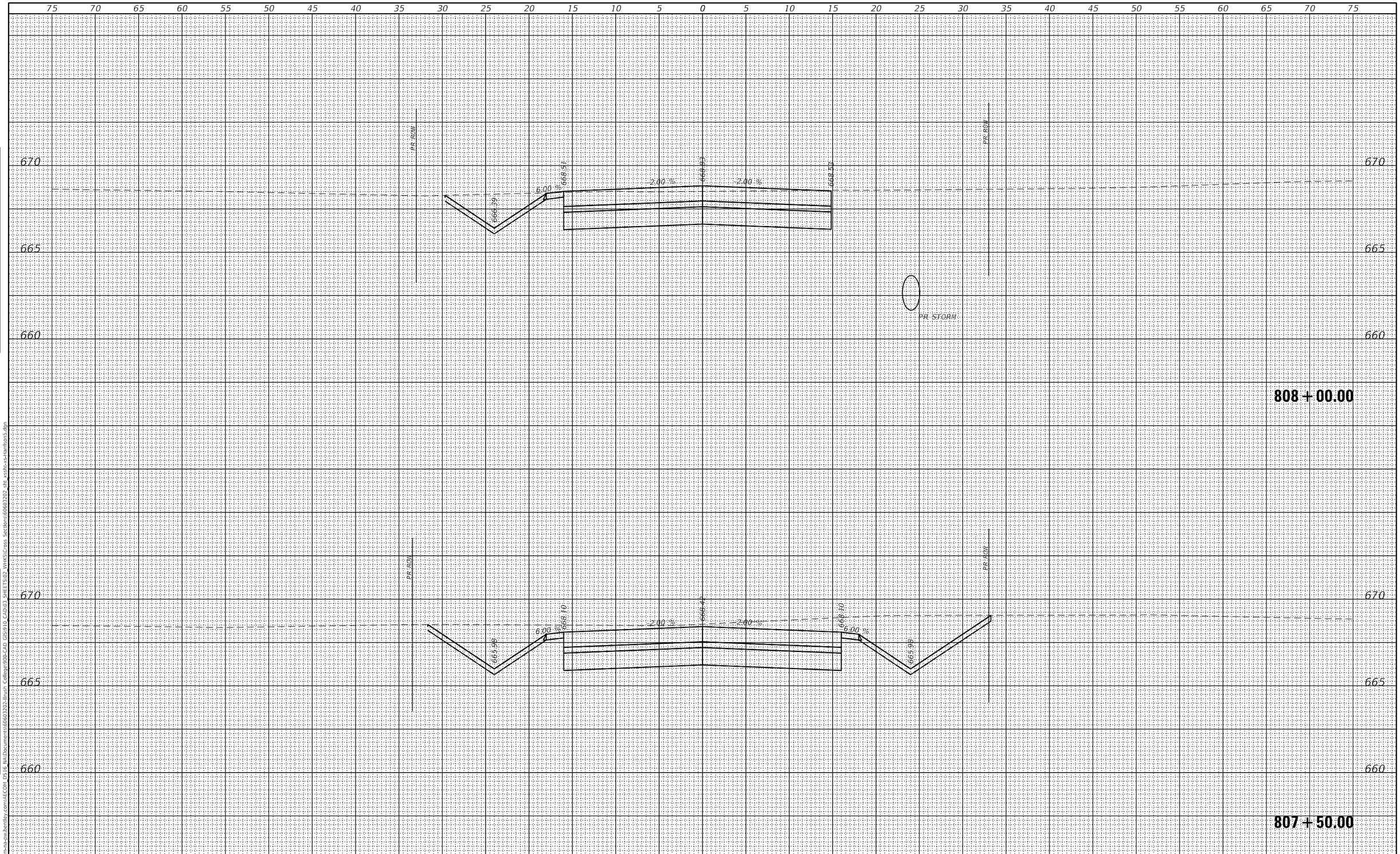

FINAL SURVEY	BY	DATE
SURVEYED		
PLOTTED		
TEMPLATE		
AREAS		
AREAS CHECKED		

NOTE BOOK
NO.

ORIGINAL SURVEY	BY	DATE
SURVEYED		
PLOTTED		
TEMPLATE		
AREAS		
AREAS CHECKED		

NOTE BOOK
NO.

MODEL: Default
FILE NAME: pw:\\aecom-na-pw.bentley.com:AECOM DS16 NA\Documents\60603202-Brush College 90b-CAD GIS\910 CAD\03 SHEETS\02 VHKS\Cross Sections\60603202 sht xssht-xs-harrison5.dgn

design firm no. 184001036
whks
engineers + planners + land surveyors

USER NAME = $OPERATOR$	DESIGNED - -	REVISED
	CHECKED - -	REVISED
PLOT SCALE = 10.0000 ' / in.	DRAWN - -	REVISED
PLOT DATE = 6/17/2020	CHECKED - -	REVISED

STATE OF ILLINOIS
DEPARTMENT OF TRANSPORTATION

E HARRISON AVENUE (WEST LEG)
CROSS SECTIONS

SCALE: 1" = 5' | SHEET 9 OF 13 SHEETS | STA. 807+50.00 TO STA. 808+00.00

F.A.U. RTE.	SECTION	COUNTY	TOTAL SHEETS	SHEET NO.
7448	09-00933-01-BR	MACON	572	546

CONTRACT NO. 6WGY(165)

ILLINOIS | FED. AID PROJECT

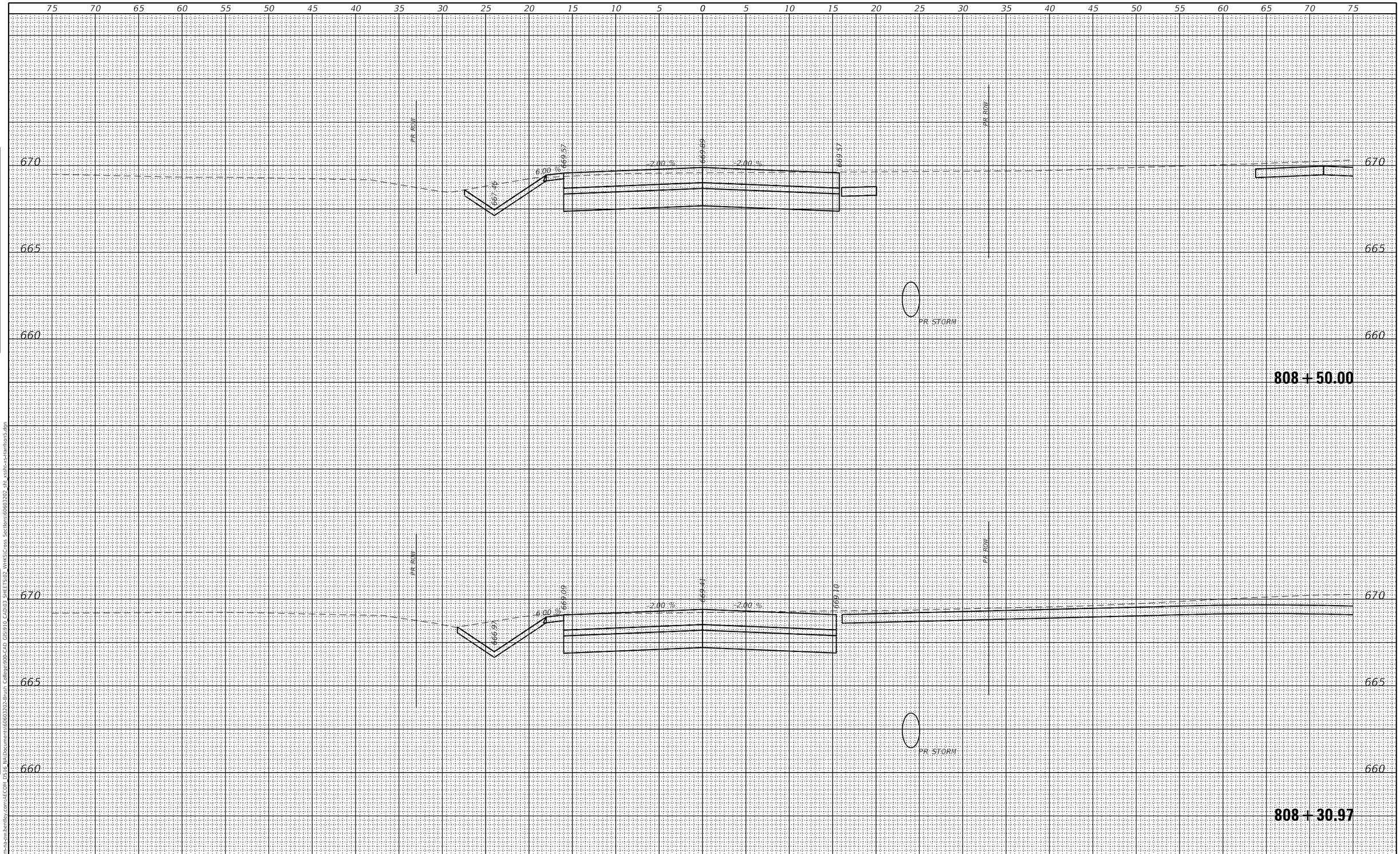

FINAL SURVEY		BY	DATE
NOTE BOOK	SURVEYED		
	PLOTTED		
	TEMPLATE		
	AREAS		
NO.	AREAS CHECKED		

ORIGINAL SURVEY		BY	DATE
NOTE BOOK	SURVEYED		
	PLOTTED		
	TEMPLATE		
	AREAS		
NO.	AREAS CHECKED		

MODEL: Default
FILE NAME: pw:\\aecom-na-sw.bentley.com:AECOM DS16 NA\Documents\60603202-Brush College90b-CAD GIS\910 CAD\03 SHEETS\02 VHKS\Cross Sections\60603202 sht xssht-xs-harrison5.dgn

design firm no. 184001036
whks
engineers + planners + land surveyors

USER NAME = $OPERATOR$	DESIGNED - -	REVISED
	CHECKED - -	REVISED
PLOT SCALE = 10.0000 ' / in.	DRAWN - -	REVISED
PLOT DATE = 6/17/2020	CHECKED - -	REVISED

STATE OF ILLINOIS
DEPARTMENT OF TRANSPORTATION

E HARRISON AVENUE (WEST LEG)
CROSS SECTIONS

SCALE: 1" = 5' | SHEET 10 OF 13 SHEETS | STA. 808+30.97 TO STA. 808+50.00

F.A.U. RTE.	SECTION	COUNTY	TOTAL SHEETS	SHEET NO.
7448	09-00933-01-BR	MACON	572	547

CONTRACT NO. 6WGY(165)

ILLINOIS | FED. AID PROJECT

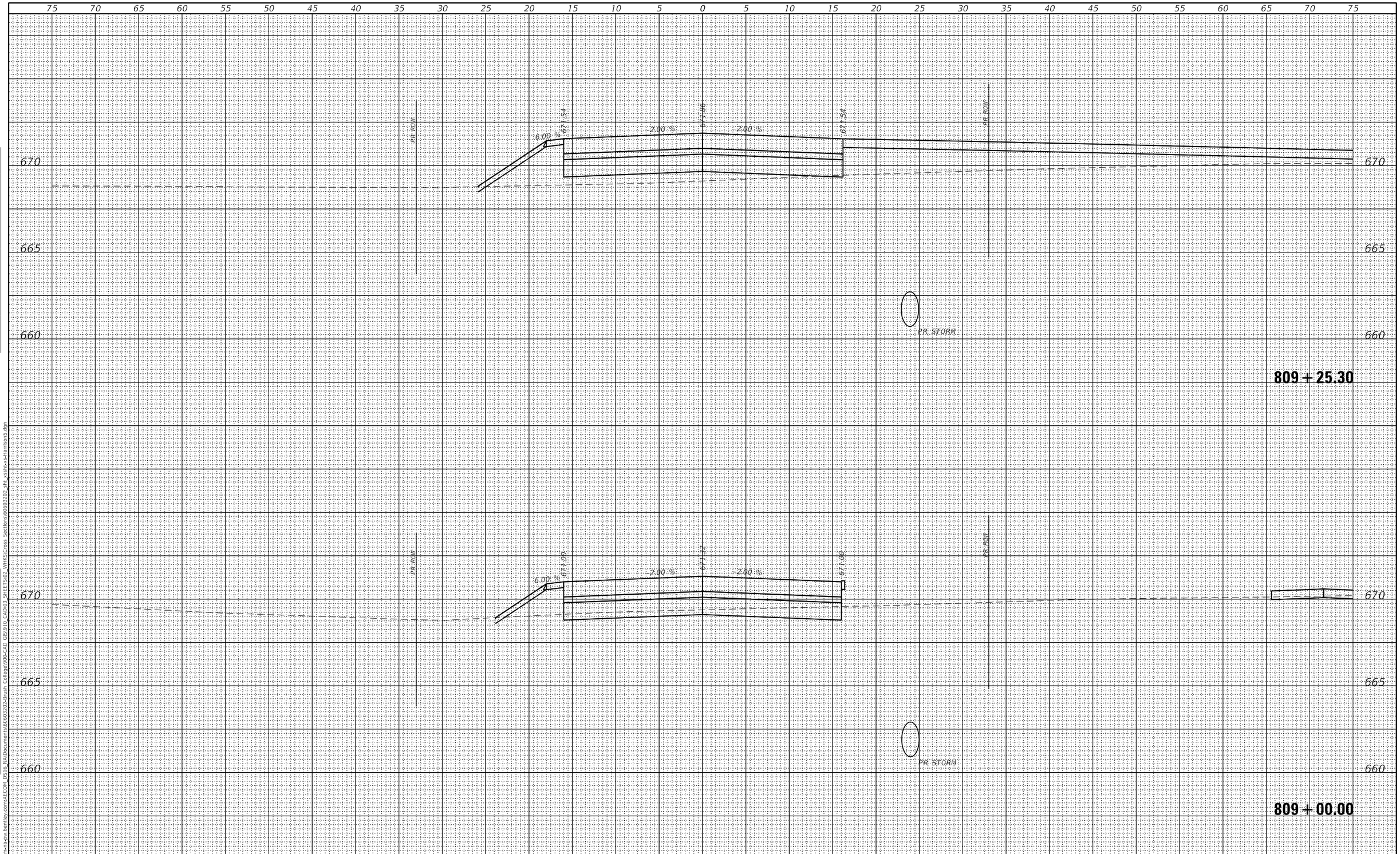

FINAL SURVEY		BY	DATE
NOTE BOOK	SURVEYED		
	PLOTTED		
	TEMPLATE		
	AREAS		
NO.	AREAS CHECKED		

ORIGINAL SURVEY		BY	DATE
NOTE BOOK	SURVEYED		
	PLOTTED		
	TEMPLATE		
	AREAS		
NO.	AREAS CHECKED		

MODEL: Default
FILE NAME: pw:\\aecom-na-pw.bentley.com:AECOM DS16 NA\Documents\60603202-Brush College90b-CAD GIS\910 CAD\03 SHEETS\02 VHKS\Cross Sections\60603202 sht xssht-xs-Harrison5.dgn

design firm no. 184001036
whks
engineers + planners + land surveyors

USER NAME = $OPERATOR$	DESIGNED - -	REVISED
	CHECKED - -	REVISED
PLOT SCALE = 10.0000 ' / in.	DRAWN - -	REVISED
PLOT DATE = 6/17/2020	CHECKED - -	REVISED

STATE OF ILLINOIS
DEPARTMENT OF TRANSPORTATION

E HARRISON AVENUE (WEST LEG)
CROSS SECTIONS

SCALE: 1" = 5' | SHEET 11 OF 13 SHEETS | STA. 809+00.00 TO STA. 809+25.30

F.A.U. RTE.	SECTION	COUNTY	TOTAL SHEETS	SHEET NO.
7448	09-00933-01-BR	MACON	572	548

CONTRACT NO. 6WGY(165)

ILLINOIS | FED. AID PROJECT

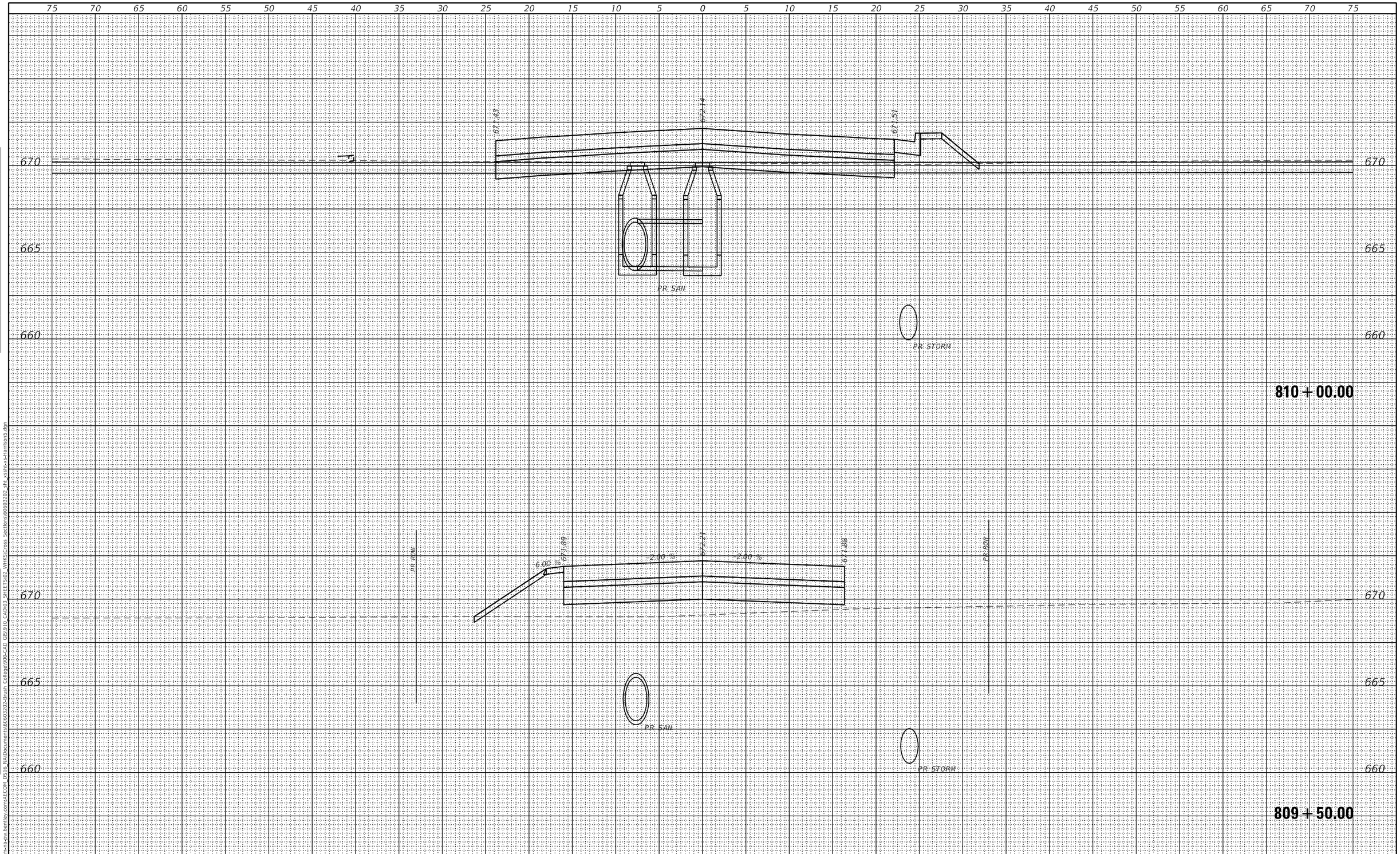

FINAL SURVEY		BY	DATE
NOTE BOOK	SURVEYED		
	PLOTTED		
	TEMPLATE		
	AREAS		
NO.	AREAS CHECKED		

ORIGINAL SURVEY		BY	DATE
NOTE BOOK	SURVEYED		
	PLOTTED		
	TEMPLATE		
	AREAS		
NO.	AREAS CHECKED		

MODEL: Default
FILE NAME: pw:\\aecom-na-sw.bentley.com:AECOM DS16 NA\Documents\60603202-Brush College90b-CAD GIS\910 CAD\03 SHEETS\02 VHKS\Cross Sections\60603202 sht xssht-xs-harrison5.dgn

design firm no. 184001036
whks
engineers + planners + land surveyors

USER NAME = $OPERATOR$	DESIGNED - -	REVISED
	CHECKED - -	REVISED
PLOT SCALE = 10.0000 ' / in.	DRAWN - -	REVISED
PLOT DATE = 6/17/2020	CHECKED - -	REVISED

STATE OF ILLINOIS
DEPARTMENT OF TRANSPORTATION

E HARRISON AVENUE (WEST LEG)
CROSS SECTIONS

SCALE: 1" = 5' | SHEET 12 OF 13 SHEETS | STA. 809+50.00 TO STA. 810+00.00

F.A.U. RTE.	SECTION	COUNTY	TOTAL SHEETS	SHEET NO.
7448	09-00933-01-BR	MACON	572	549

CONTRACT NO. 6WGY(165)

ILLINOIS | FED. AID PROJECT

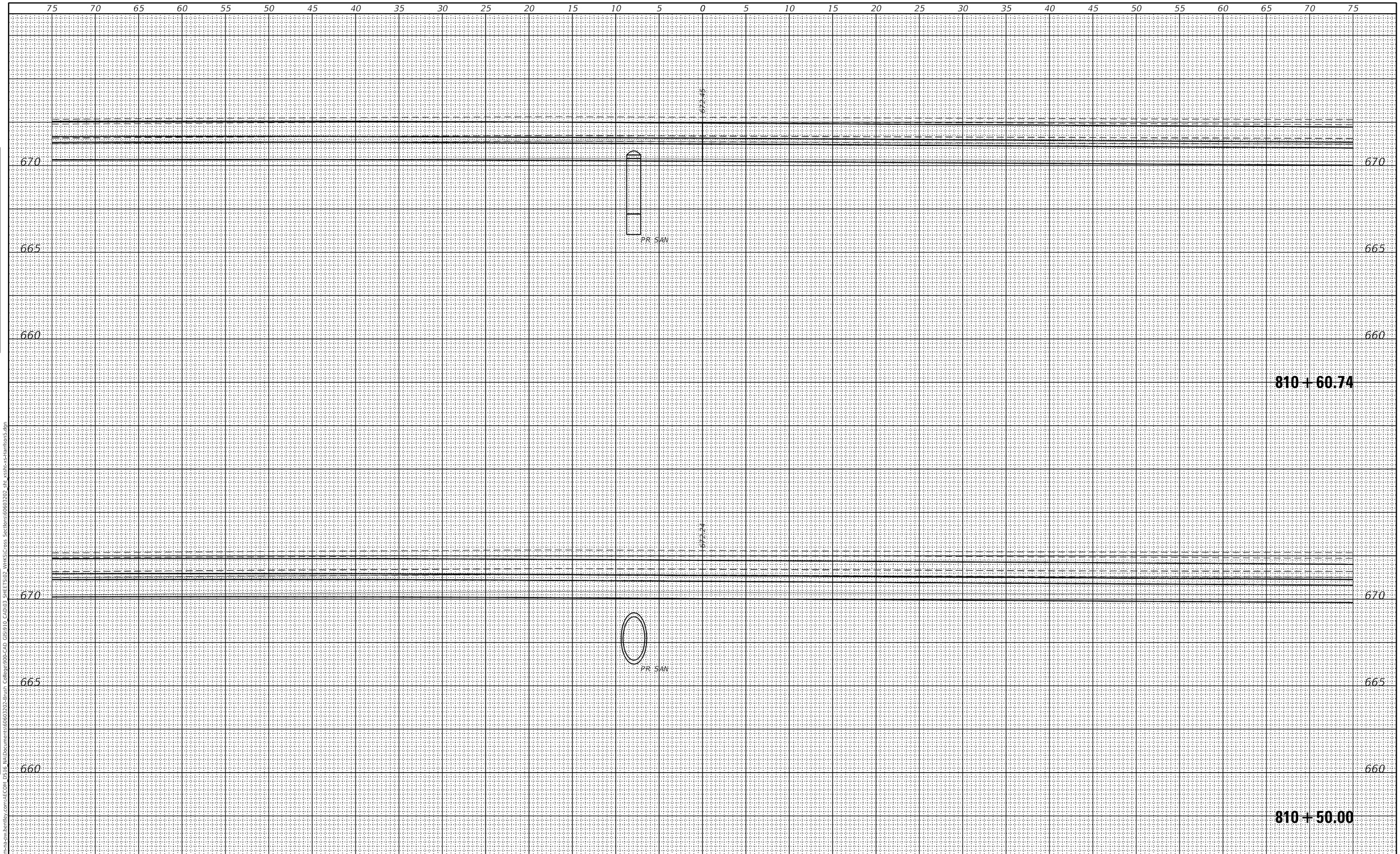

FINAL SURVEY	BY	DATE
SURVEYED		
PLOTTED		
TEMPLATE		
AREAS		
AREAS CHECKED		
NOTE BOOK		
NO.		

ORIGINAL SURVEY	BY	DATE
SURVEYED		
PLOTTED		
TEMPLATE		
AREAS		
AREAS CHECKED		
NOTE BOOK		
NO.		

MODEL: Default
FILE NAME: pw:\\aecom-na-sw.bentley.com:AECOM DS16 NA\Documents\60603202-Brush College90b-CAD GIS\910 CAD\03 SHEETS\02 VHKS\Cross Sections\60603202 sht xsshc-xs-harrison5.dgn

design firm no. 184001036
whks
engineers + planners + land surveyors

USER NAME = $OPERATOR$	DESIGNED - -	REVISED
	CHECKED - -	REVISED
PLOT SCALE = 10.0000 ' / in.	DRAWN - -	REVISED
PLOT DATE = 6/17/2020	CHECKED - -	REVISED

STATE OF ILLINOIS
DEPARTMENT OF TRANSPORTATION

E HARRISON AVENUE (WEST LEG)
CROSS SECTIONS

SCALE: 1" = 5' | SHEET 13 OF 13 SHEETS | STA. 810+50.00 TO STA. 810+60.74

F.A.U. RTE.	SECTION	COUNTY	TOTAL SHEETS	SHEET NO.
7448	09-00933-01-BR	MACON	572	550

CONTRACT NO. 6WGY(165)
ILLINOIS | FED. AID PROJECT

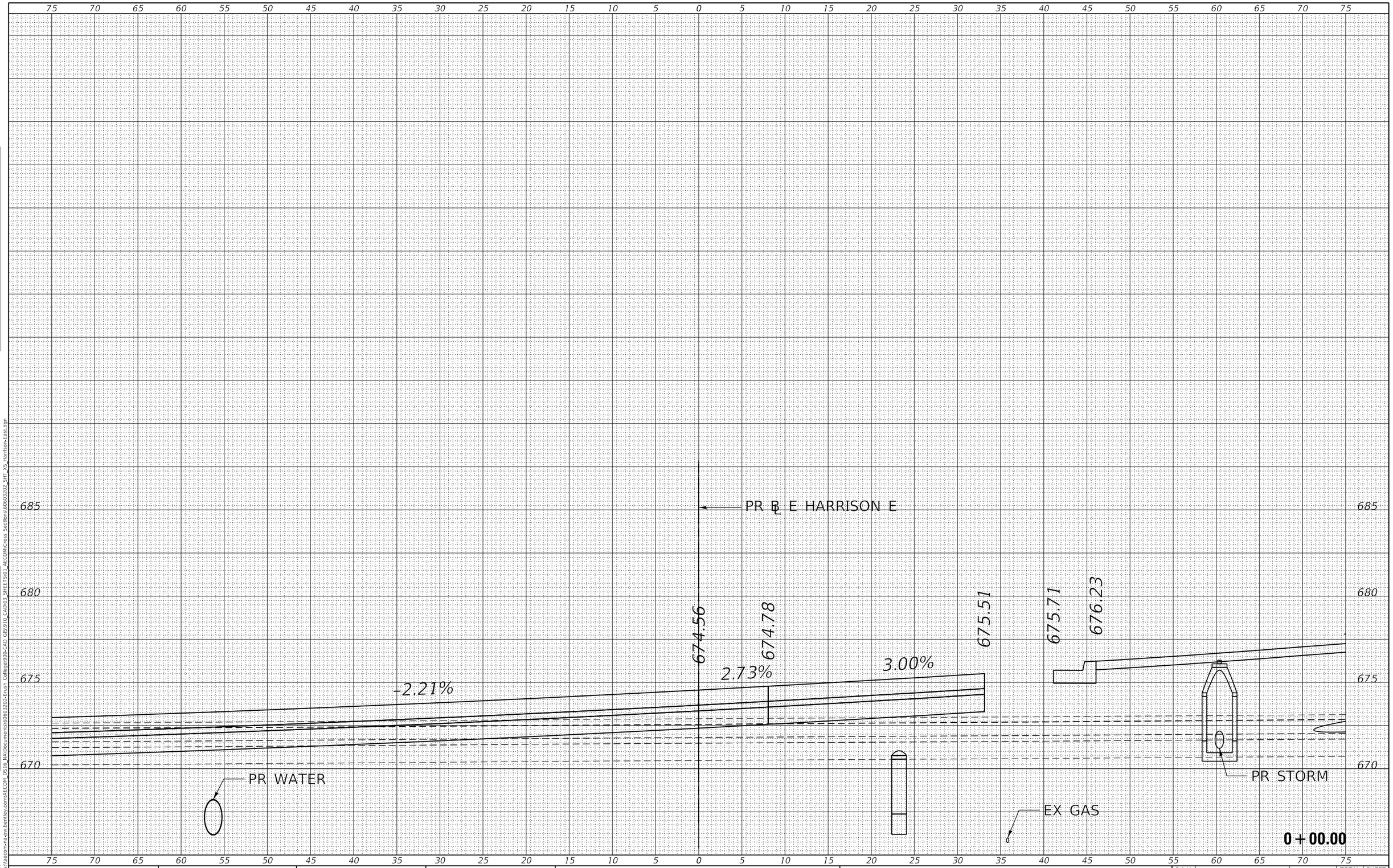

FINAL SURVEY	BY	DATE
SURVEYED		
PLOTTED		
TEMPLATE		
AREAS		
AREAS CHECKED		
NOTE BOOK NO.		

ORIGINAL SURVEY	BY	DATE
SURVEYED		
PLOTTED		
TEMPLATE		
AREAS		
AREAS CHECKED		
NOTE BOOK NO.		

MODEL: Default
FILE NAME: pw:\\aecom-na-pw.bentley.com:AECOM_DS16_NA\Documents\60603202-Brush College\900-CAD GIS\910_CAD\03_SHEETS\01_AECOM\Cross_Sections\60603202_SHT_XS_Harrison-East.dgn

AECOM
345 EAST ASH AVENUE, SUITE B
DECATUR, IL 62526-6161
PHONE: (217) 875-4800 FAX: (217) 875-3577

USER NAME = meron.asnake	DESIGNED - LMB	REVISED -	
	DRAWN - LMB	REVISED -	
PLOT SCALE = 10.0000 ' / in.	CHECKED - WBS	REVISED -	
PLOT DATE = 6/19/2020	DATE - 6/12/2020	REVISED -	

STATE OF ILLINOIS
DEPARTMENT OF TRANSPORTATION

E HARRISON ST (EAST LEG)
CROSS SECTIONS

SCALE: 1"=10H':5V' | SHEET 1 OF 17 SHEETS | STA. +00.00 TO STA. +00.00

F.A.U. RTE.	SECTION	COUNTY	TOTAL SHEETS	SHEET NO.
7448	09-00933-01-BR	MACON	572	551
		CONTRACT NO. XXXX(XXX)		
		ILLINOIS	FED. AID PROJECT	

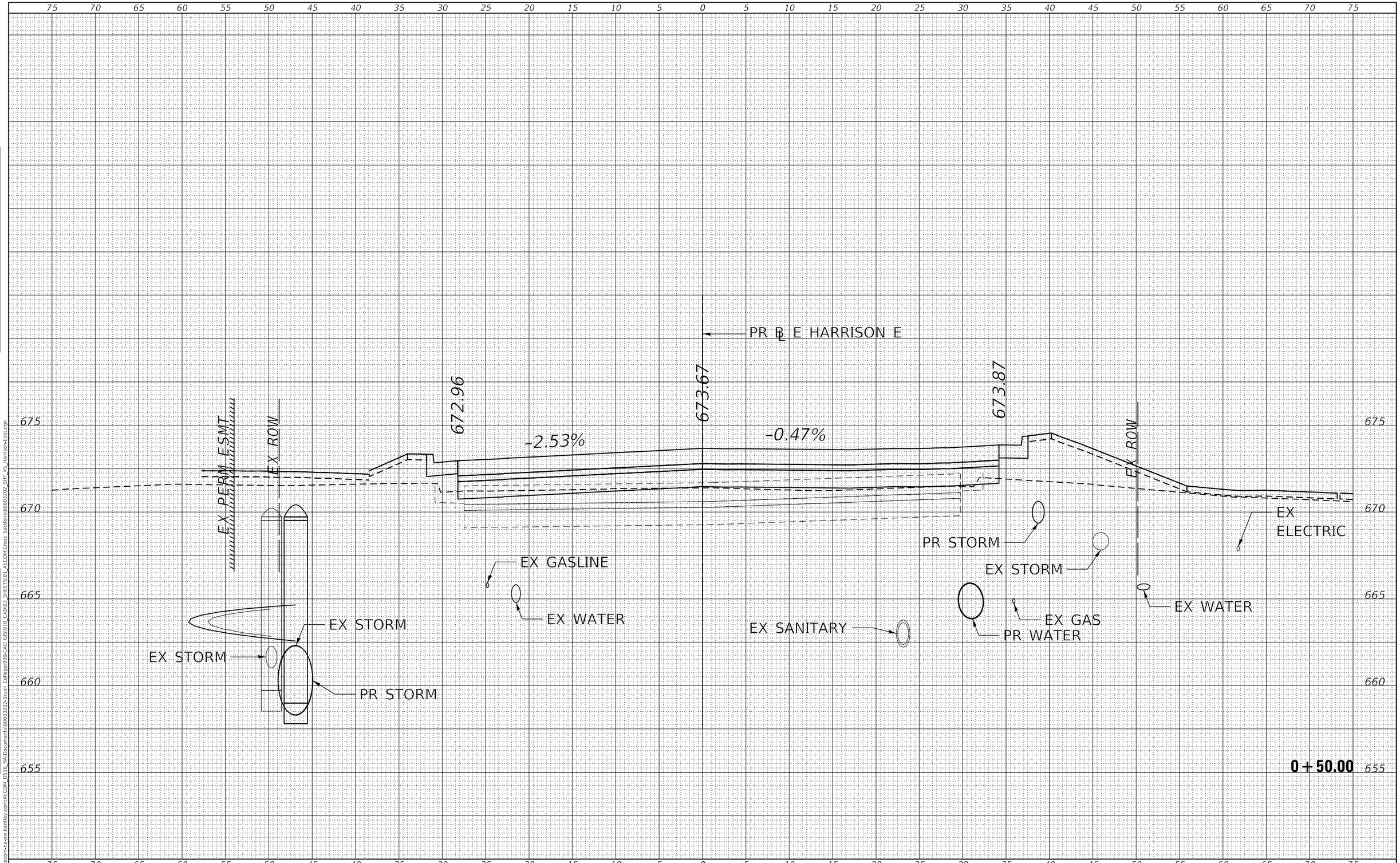

FINAL SURVEY	BY	DATE
SURVEYED		
PLOTTED		
TEMPLATE		
AREAS		
AREAS CHECKED		
NOTE BOOK		
NO.		

ORIGINAL SURVEY	BY	DATE
SURVEYED		
PLOTTED		
TEMPLATE		
AREAS		
AREAS CHECKED		
NOTE BOOK		
NO.		

MODEL: Default
FILE NAME: pw:\\aecom-na-sw.bentley.com:AECOM DS16 NA\Documents\60603202-Brush College\900-CAD GIS\910_CAD\03 SHEETS\01_AECOM\Cross Sections\60603202 SHT XS Harrison-East.dgn

AECOM
345 EAST ASH AVENUE SUITE B
DECATUR, IL 62526-6161
PHONE: (217) 875-4800 FAX: (217) 875-3577

USER NAME = meron.asnake	DESIGNED - LMB	REVISED -	
	DRAWN - LMB	REVISED -	
PLOT SCALE = 10.0000 ' / in.	CHECKED - WBS	REVISED -	
PLOT DATE = 6/19/2020	DATE - 6/12/2020	REVISED -	

STATE OF ILLINOIS
DEPARTMENT OF TRANSPORTATION

E HARRISON ST (EAST LEG)
CROSS SECTIONS

SCALE: 1"=10H':5V' | SHEET 2 OF 17 SHEETS | STA. +50.00 TO STA. +50.00

F.A.U. RTE.	SECTION	COUNTY	TOTAL SHEETS	SHEET NO.
7448	09-00933-01-BR	MACON	572	552
		CONTRACT NO. XXXX(XXX)		
		ILLINOIS	FED. AID PROJECT	

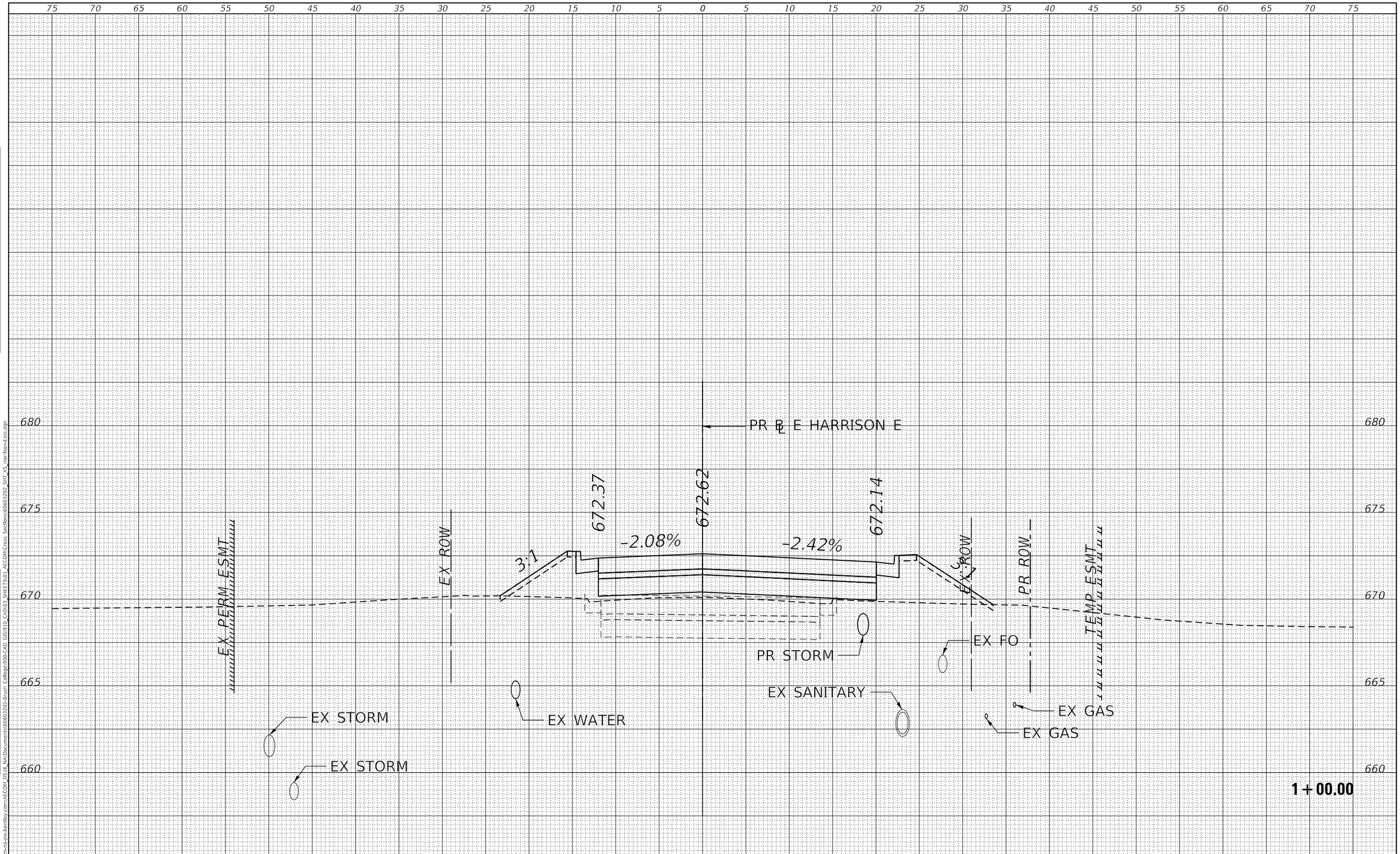

FINAL SURVEY		BY	DATE
	SURVEYED		
	PLOTTED		
NOTE BOOK	TEMPLATE		
	AREAS		
	AREAS CHECKED		
NO.			

ORIGINAL SURVEY		BY	DATE
	SURVEYED		
	PLOTTED		
NOTE BOOK	TEMPLATE		
	AREAS		
	AREAS CHECKED		
NO.			

MODEL: Default
FILE NAME: pw:\\aecom-na-sw.bentley.com:AECOM DS16 NA\documents\60603202-Brush College90b-CAD GIS\910 CAD\03 SHEETS\01 AECOM\Cross Sections\60603202 SHT XS Harrison-East.dgn

AECOM
345 EAST ASH AVENUE SUITE B
DECATUR, IL 62526-6161
PHONE: (217) 875-4800 FAX: (217) 875-3577

USER NAME = meron.asnake	DESIGNED - LMB	REVISED -	
	DRAWN - LMB	REVISED -	
PLOT SCALE = 10.0000 ' / in.	CHECKED - WBS	REVISED -	
PLOT DATE = 6/19/2020	DATE - 6/12/2020	REVISED -	

STATE OF ILLINOIS
DEPARTMENT OF TRANSPORTATION

E HARRISON ST (EAST LEG)
CROSS SECTIONS

SCALE: 1"=10H':5V' | SHEET 3 OF 17 SHEETS | STA. 1+00.00 TO STA. 1+00.00

F.A.U. RTE.	SECTION	COUNTY	TOTAL SHEETS	SHEET NO.
7448	09-00933-01-BR	MACON	572	553
		CONTRACT NO. XXXX(XXX)		
		ILLINOIS	FED. AID PROJECT	

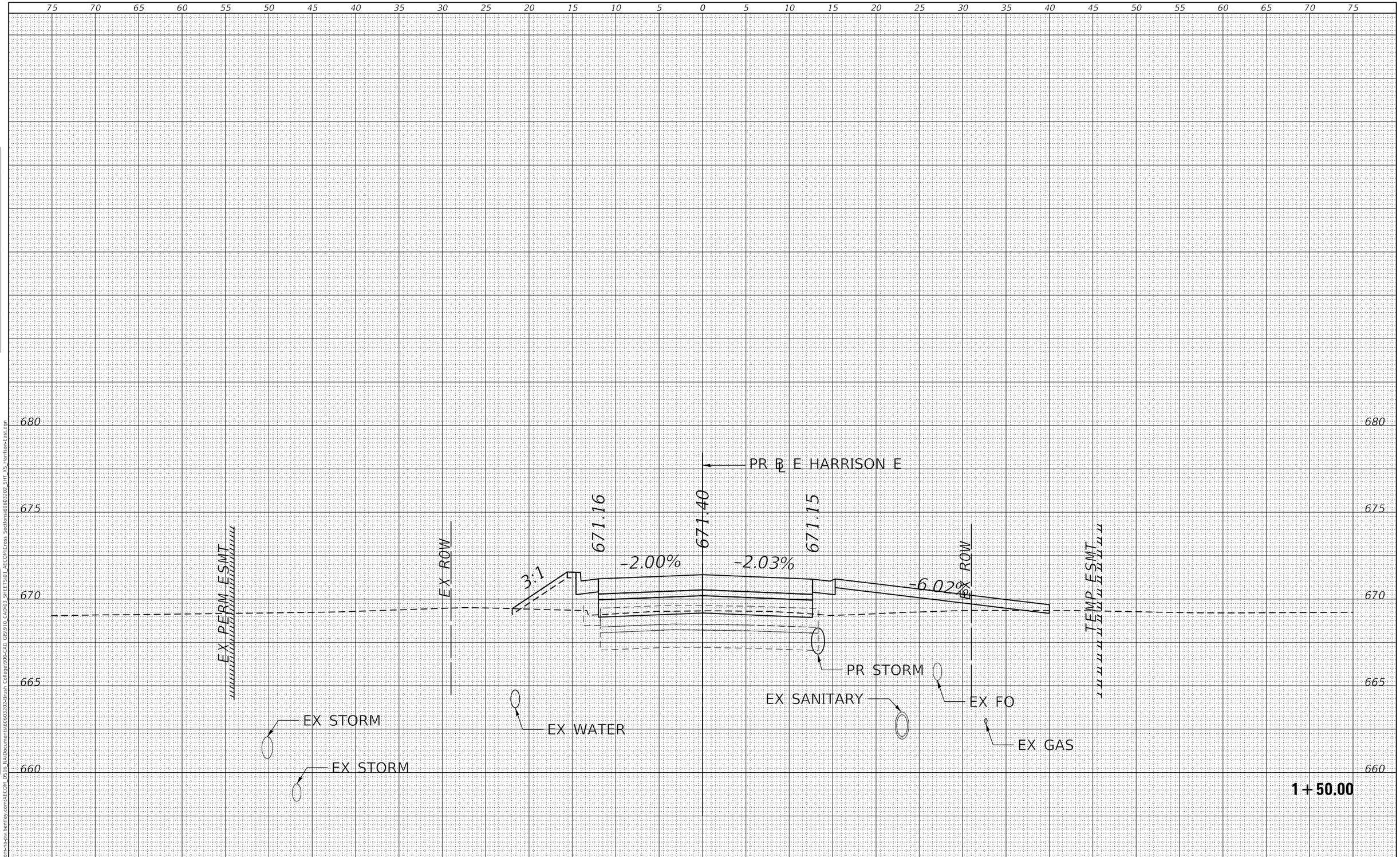

USER NAME = meron.asnake	DESIGNED - LMB	REVISED -	
	DRAWN - LMB	REVISED -	
PLOT SCALE = 10.0000 ' / in.	CHECKED - WBS	REVISED -	
PLOT DATE = 6/19/2020	DATE - 6/12/2020	REVISED -	

AECOM
345 EAST ASH AVENUE, SUITE B
DECATUR, IL 62526-6161
PHONE: (217) 875-4800 FAX: (217) 875-3577

STATE OF ILLINOIS
DEPARTMENT OF TRANSPORTATION

E HARRISON ST (EAST LEG)
CROSS SECTIONS

SCALE: 1"=10H':5V' | SHEET 4 OF 17 SHEETS | STA. 1+50.00 TO STA. 1+50.00

F.A.U. RTE.	SECTION	COUNTY	TOTAL SHEETS	SHEET NO.
7448	09-00933-01-BR	MACON	572	554
		CONTRACT NO. XXXX(XXX)		
		ILLINOIS	FED. AID PROJECT	

FINAL SURVEY		BY	DATE
	SURVEYED		
	PLOTTED		
NOTE BOOK	TEMPLATE		
	AREAS		
NO.	AREAS CHECKED		

ORIGINAL SURVEY		BY	DATE
	SURVEYED		
	PLOTTED		
NOTE BOOK	TEMPLATE		
	AREAS		
NO.	AREAS CHECKED		

MODEL: Default
FILE NAME: pw:\\aecom-na-pw.bentley.com:AECOM DS16 NA\Documents\60603202-Brush College\900-CAD GIS\910_CAD\03 SHEETS\01 AECOM\Cross Sections\60603202 SHT XS Harrison-East.dgn

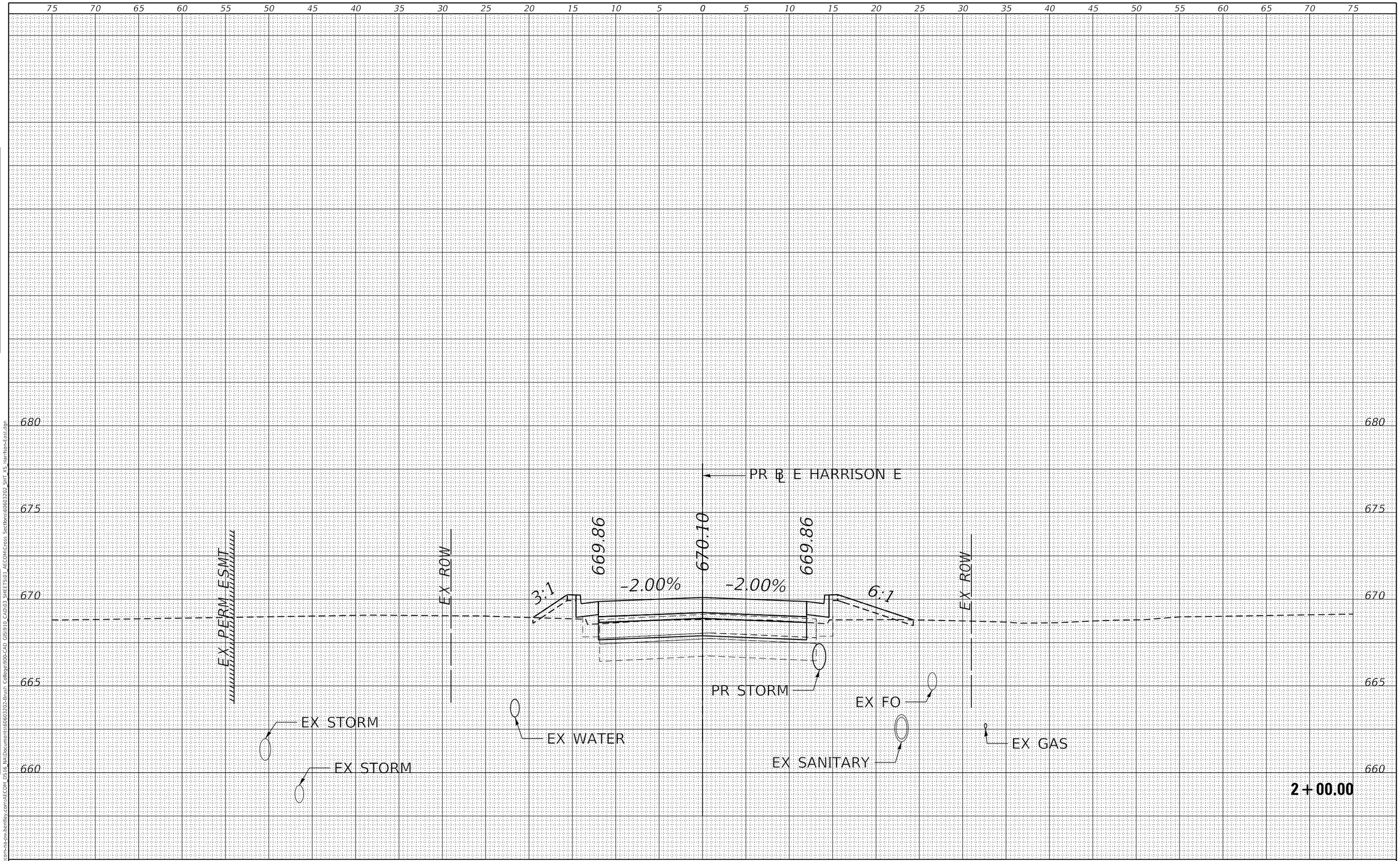

FINAL SURVEY	BY	DATE
SURVEYED		
PLOTTED		
TEMPLATE		
AREAS		
AREAS CHECKED		
NOTE BOOK NO.		

ORIGINAL SURVEY	BY	DATE
SURVEYED		
PLOTTED		
TEMPLATE		
AREAS		
AREAS CHECKED		
NOTE BOOK NO.		

MODEL: Default
FILE NAME: pw:\\aecom-na-sw.bentley.com:AECOM_DS16_NA\documents\60603202-Brush College90b-CAD GIS\910 CAD\03 SHEETS\01 AECOM\Cross Sections\60603202 SHT XS Harrison-East.dgn

AECOM
345 EAST ASH AVENUE SUITE B
DECATUR, IL 62526-6161
PHONE: (217) 875-4800 FAX: (217) 875-3577

USER NAME = meron.asnake	DESIGNED - LMB	REVISED -	
	DRAWN - LMB	REVISED -	
PLOT SCALE = 10.0000 ' / in.	CHECKED - WBS	REVISED -	
PLOT DATE = 6/19/2020	DATE - 6/12/2020	REVISED -	

STATE OF ILLINOIS
DEPARTMENT OF TRANSPORTATION

E HARRISON ST (EAST LEG)
CROSS SECTIONS

SCALE: 1"=10H':5V' | SHEET 5 OF 17 SHEETS | STA. 2+00.00 TO STA. 2+00.00

F.A.U. RTE.	SECTION	COUNTY	TOTAL SHEETS	SHEET NO.
7448	09-00933-01-BR	MACON	572	555
		CONTRACT NO. XXXX(XXX)		
		ILLINOIS	FED. AID PROJECT	

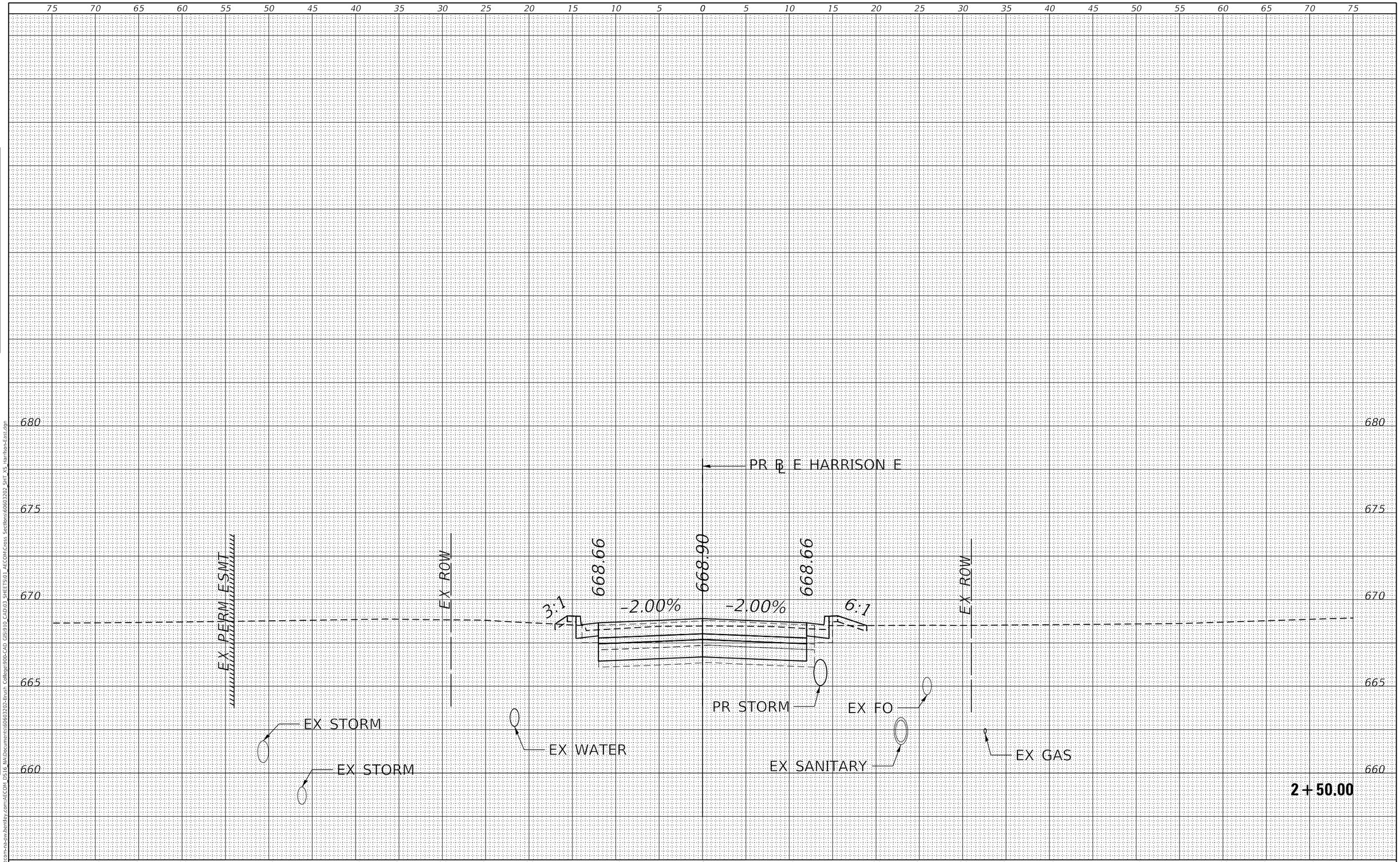

FINAL SURVEY	BY	DATE
SURVEYED		
PLOTTED		
TEMPLATE		
AREAS		
AREAS CHECKED		
NOTE BOOK NO.		

ORIGINAL SURVEY	BY	DATE
SURVEYED		
PLOTTED		
TEMPLATE		
AREAS		
AREAS CHECKED		
NOTE BOOK NO.		

MODEL: Default
FILE NAME: pw:\\aecom-na-pw.bentley.com:AECOM DS16 NA\Documents\60603202-Brush College\900-CAD GIS\910 CAD\03 SHEETS\01 AECOM\Cross Sections\60603202_SHT_XS_Harrison-East.dgn

AECOM
345 EAST ASH AVENUE, SUITE B
DECATUR, IL 62526-6161
PHONE: (217) 875-4800 FAX: (217) 875-3577

USER NAME = meron.asnake	DESIGNED - LMB	REVISED -	
	DRAWN - LMB	REVISED -	
PLOT SCALE = 10.0000 ' / in.	CHECKED - WBS	REVISED -	
PLOT DATE = 6/19/2020	DATE - 6/12/2020	REVISED -	

STATE OF ILLINOIS
DEPARTMENT OF TRANSPORTATION

E HARRISON ST (EAST LEG)
CROSS SECTIONS

SCALE: 1"=10H':5V' | SHEET 6 OF 17 SHEETS | STA. 2+50.00 TO STA. 2+50.00

F.A.U. RTE.	SECTION	COUNTY	TOTAL SHEETS	SHEET NO.
7448	09-00933-01-BR	MACON	572	556
		CONTRACT NO. XXXX(XXX)		
		ILLINOIS	FED. AID PROJECT	

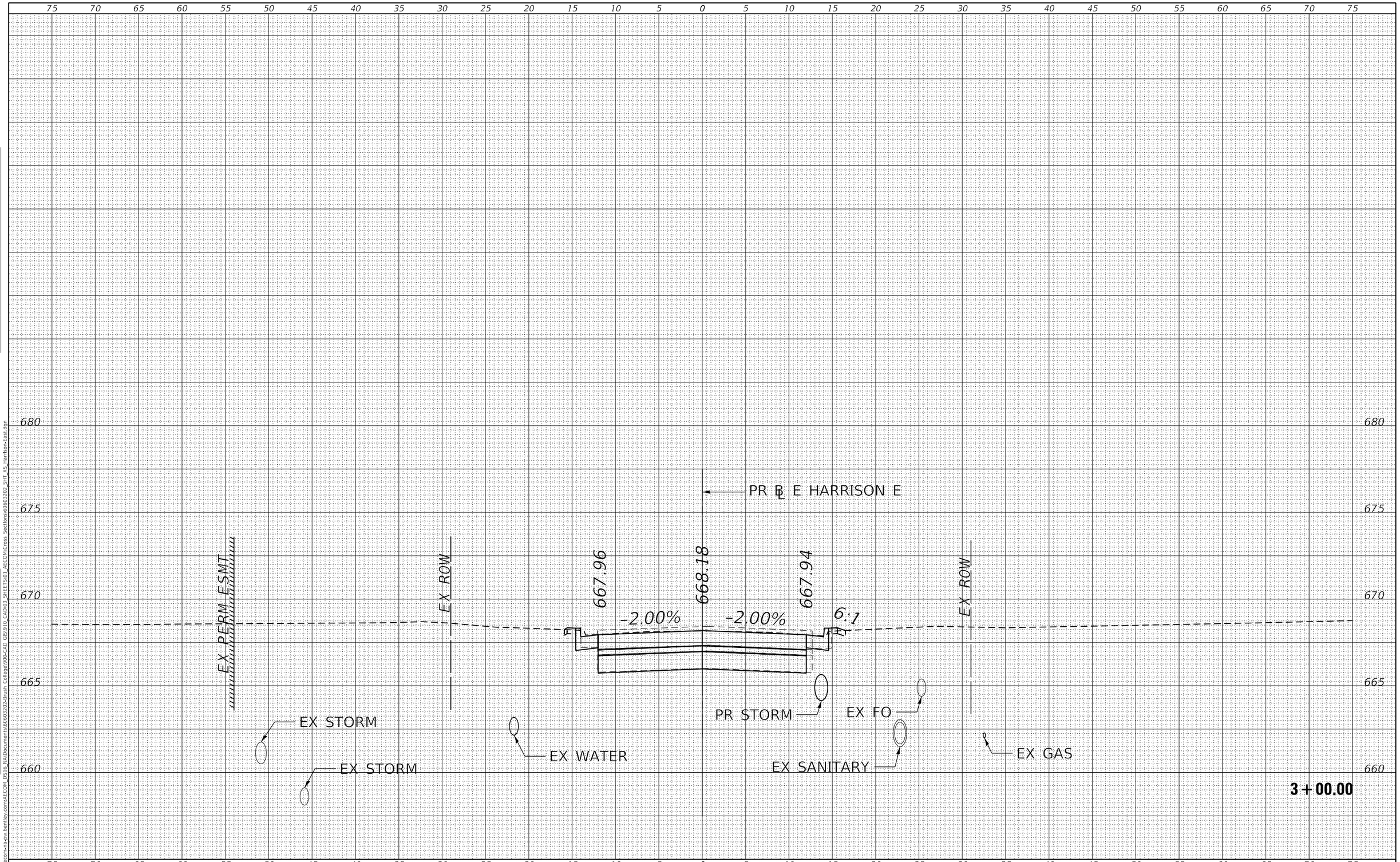

FINAL SURVEY	BY	DATE
SURVEYED		
PLOTTED		
TEMPLATE		
AREAS		
AREAS CHECKED		
NOTE BOOK NO.		

ORIGINAL SURVEY	BY	DATE
SURVEYED		
PLOTTED		
TEMPLATE		
AREAS		
AREAS CHECKED		
NOTE BOOK NO.		

MODEL: Default
FILE NAME: pw:\\aecom-na-pw.bentley.com:AECOM DS16 NA\Documents\60603202-Brush College\900-CAD GIS\910 CAD\03 SHEETS\01 AECOM\Cross Sections\60603202 SHT XS Harrison-East.dgn

AECOM
345 EAST ASH AVENUE, SUITE B
DECATUR, IL 62526-6161
PHONE: (217) 875-4800 FAX: (217) 875-3577

USER NAME = meron.asnake	DESIGNED - LMB	REVISED -	
	DRAWN - LMB	REVISED -	
PLOT SCALE = 10.0000 ' / in.	CHECKED - WBS	REVISED -	
PLOT DATE = 6/19/2020	DATE - 6/12/2020	REVISED -	

STATE OF ILLINOIS
DEPARTMENT OF TRANSPORTATION

E HARRISON ST (EAST LEG)
CROSS SECTIONS

SCALE: 1"=10H':5V' | SHEET 7 OF 17 SHEETS | STA. 3+00.00 TO STA. 3+00.00

F.A.U. RTE.	SECTION	COUNTY	TOTAL SHEETS	SHEET NO.
7448	09-00933-01-BR	MACON	572	557
		CONTRACT NO. XXXX(XXX)		
		ILLINOIS	FED. AID PROJECT	

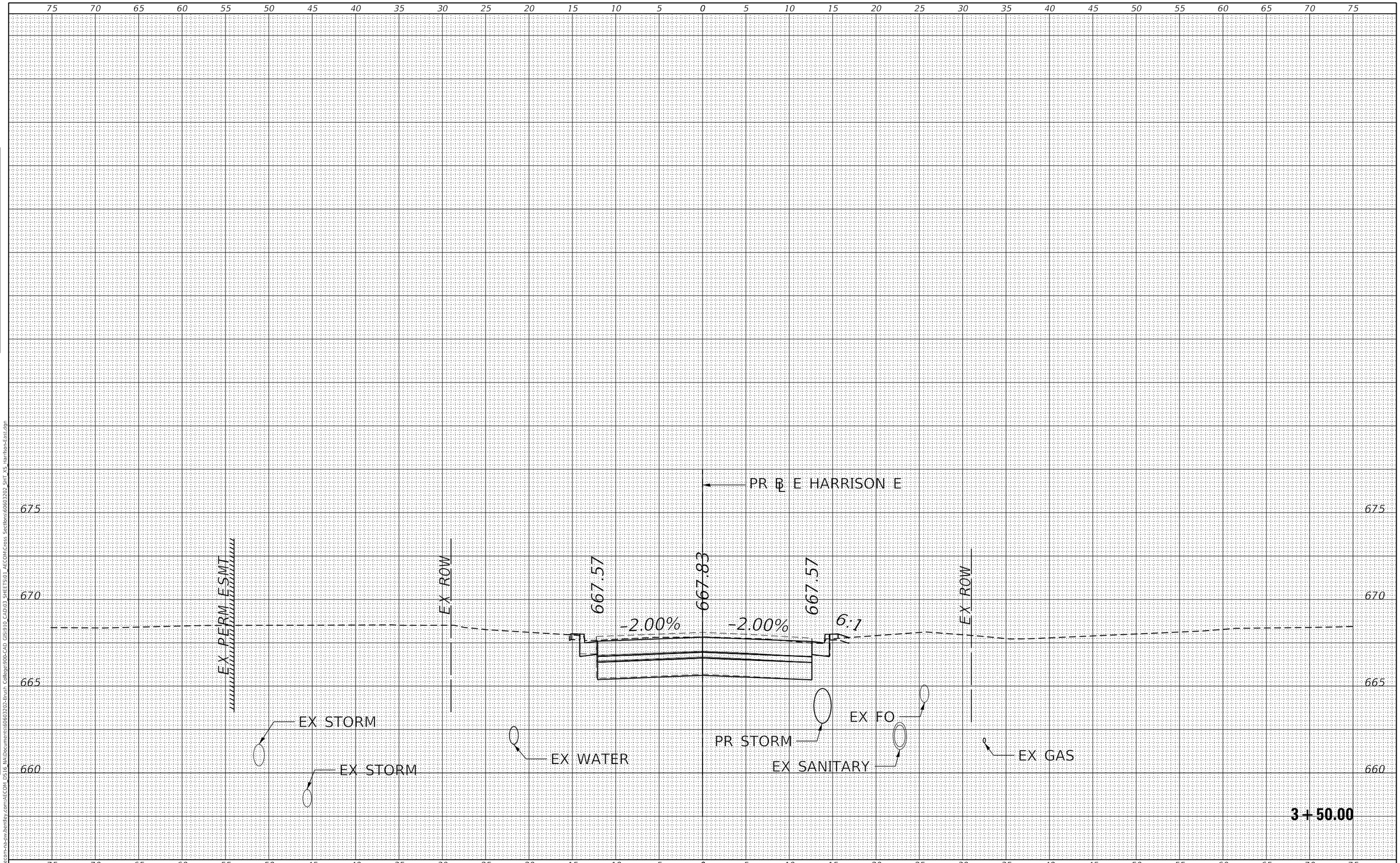

FINAL SURVEY		BY	DATE
	SURVEYED		
	PLOTTED		
NOTE BOOK	TEMPLATE		
	AREAS		
NO.	AREAS CHECKED		

ORIGINAL SURVEY		BY	DATE
	SURVEYED		
	PLOTTED		
NOTE BOOK	TEMPLATE		
	AREAS		
NO.	AREAS CHECKED		

MODEL: Default
FILE NAME: pw:\\aecom-na-pw.bentley.com:AECOM_DS16_NA\Documents\60603202-Brush College\900-CAD GIS\910_CAD\03_SHEETS\01_AECOM\Cross Sections\60603202_SHT_XS_Harrison-East.dgn

AECOM
345 EAST ASH AVENUE, SUITE B
DECATUR, IL 62526-6161
PHONE: (217) 875-4800 FAX: (217) 875-3577

USER NAME = meron.asnake	DESIGNED - LMB	REVISED -	
	DRAWN - LMB	REVISED -	
PLOT SCALE = 10.0000 ' / in.	CHECKED - WBS	REVISED -	
PLOT DATE = 6/19/2020	DATE - 6/12/2020	REVISED -	

STATE OF ILLINOIS
DEPARTMENT OF TRANSPORTATION

E HARRISON ST (EAST LEG)
CROSS SECTIONS

SCALE: 1"=10H':5V' | SHEET 8 OF 17 SHEETS | STA. 3+50.00 TO STA. 3+50.00

F.A.U. RTE.	SECTION	COUNTY	TOTAL SHEETS	SHEET NO.
7448	09-00933-01-BR	MACON	572	558
		CONTRACT NO. XXXX(XXX)		
	ILLINOIS	FED. AID PROJECT		

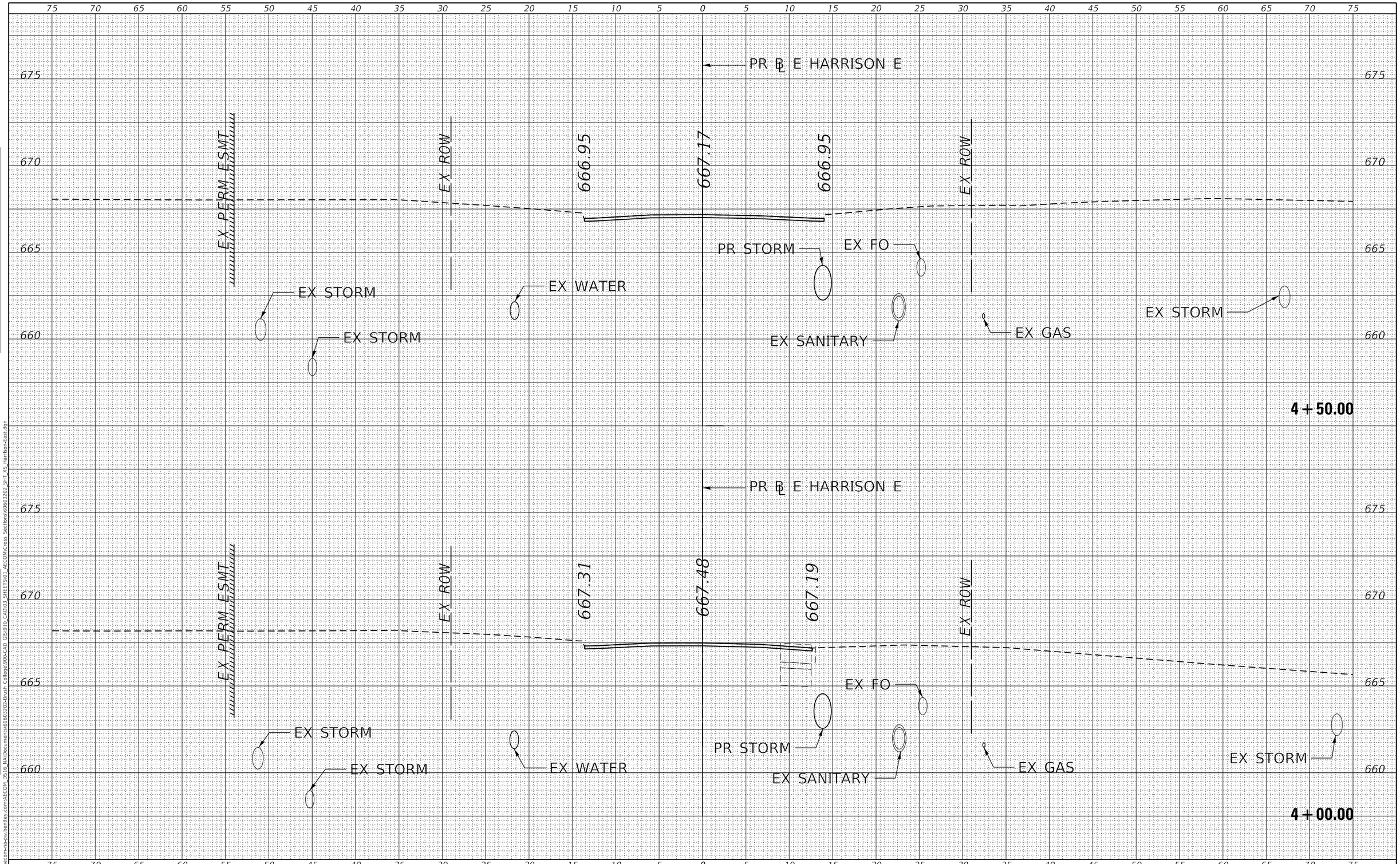

FINAL SURVEY	BY	DATE
SURVEYED		
PLOTTED		
TEMPLATE		
AREAS		
AREAS CHECKED		
NOTE BOOK		
NO.		

ORIGINAL SURVEY	BY	DATE
SURVEYED		
PLOTTED		
TEMPLATE		
AREAS		
AREAS CHECKED		
NOTE BOOK		
NO.		

MODEL: Default
FILE NAME: pw:\\aecom-na-pw.bentley.com:AECOM_DS16_NA\Documents\60603202-Brush College\900-CAD GIS\910_CAD\03_SHEETS\01_AECOM\Cross_Sections\60603202_SHT_XS_Harrison-East.dgn

AECOM
345 EAST ASH AVENUE, SUITE B
DECATUR, IL 62526-6161
PHONE: (217) 875-4800 FAX: (217) 875-3577

USER NAME = meron.asnake	DESIGNED - LMB	REVISED -	
	DRAWN - LMB	REVISED -	
PLOT SCALE = 10.0000 ' / in.	CHECKED - WBS	REVISED -	
PLOT DATE = 6/19/2020	DATE - 6/12/2020	REVISED -	

STATE OF ILLINOIS
DEPARTMENT OF TRANSPORTATION

E HARRISON ST (EAST LEG)
CROSS SECTIONS

SCALE: 1"=10H':5V' | SHEET 9 OF 17 SHEETS | STA. 4+00.00 TO STA. 4+50.00

F.A.U. RTE.	SECTION	COUNTY	TOTAL SHEETS	SHEET NO.
7448	09-00933-01-BR	MACON	572	559
		CONTRACT NO. XXXX(XXX)		
		ILLINOIS	FED. AID PROJECT	

6/12/2020

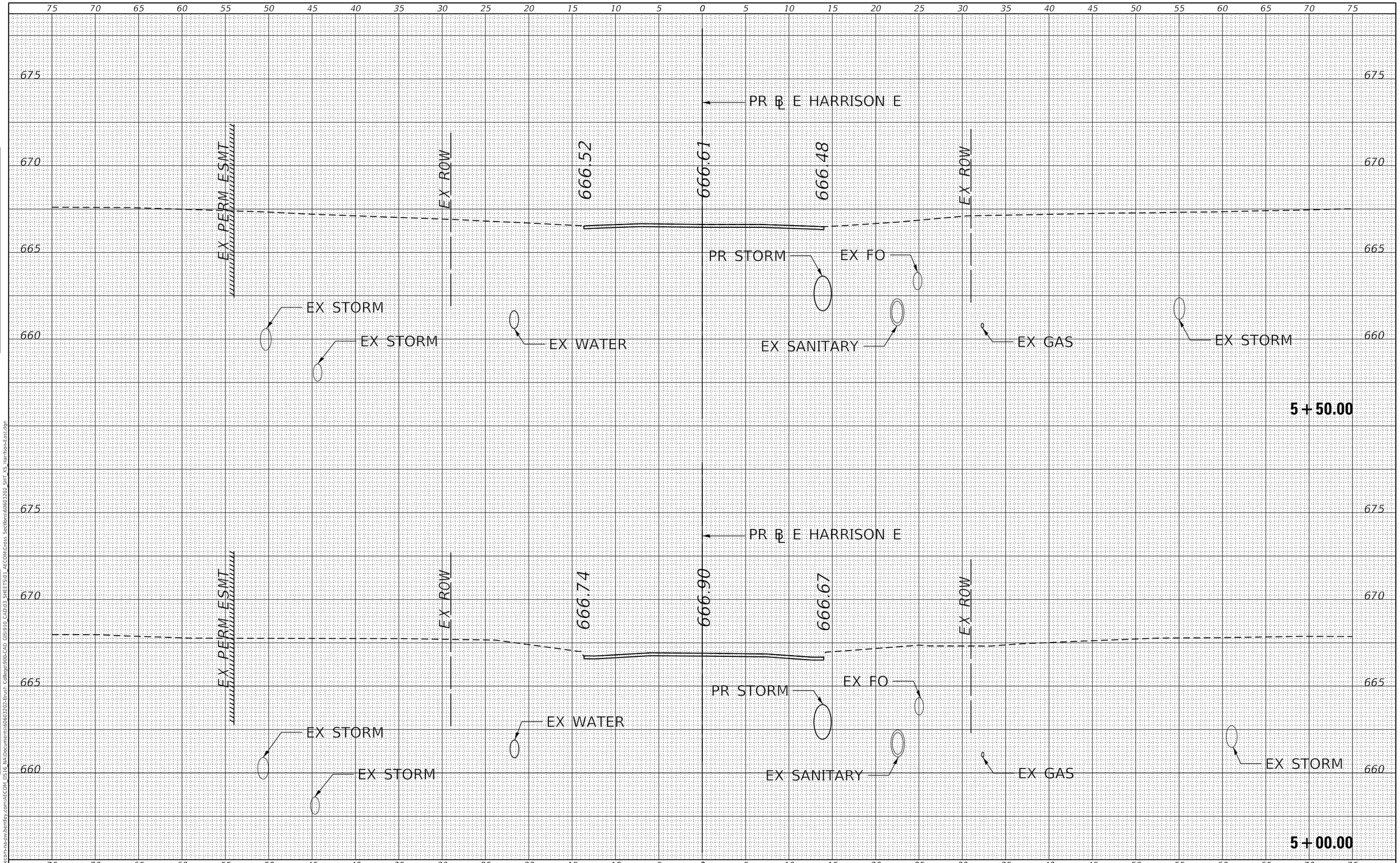

FINAL SURVEY		BY	DATE
NOTE BOOK	SURVEYED		
	PLOTTED		
	TEMPLATE		
	AREAS		
NO.	AREAS CHECKED		

ORIGINAL SURVEY		BY	DATE
NOTE BOOK	SURVEYED		
	PLOTTED		
	TEMPLATE		
	AREAS		
NO.	AREAS CHECKED		

MODEL: Default
FILE NAME: pw:\\aecom-na-pw.bentley.com:AECOM_DS16_NA\Documents\60603202-Brush College\900-CAD GIS\910 CAD\03 SHEETS\01 AECOM\Cross Sections\60603202 SHT XS Harrison-East.dgn

AECOM
345 EAST ASH AVENUE, SUITE B
DECATUR, IL 62526-6161
PHONE: (217) 875-4800 FAX: (217) 875-3577

USER NAME = meron.asnake	DESIGNED - LMB	REVISED -	
	DRAWN - LMB	REVISED -	
PLOT SCALE = 10.0000 ' / in.	CHECKED - WBS	REVISED -	
PLOT DATE = 6/19/2020	DATE - 6/12/2020	REVISED -	

STATE OF ILLINOIS
DEPARTMENT OF TRANSPORTATION

E HARRISON ST (EAST LEG)
CROSS SECTIONS

SCALE: 1"=10H':5V' | SHEET 10 OF 17 SHEETS | STA. 5+00.00 TO STA. 5+50.00

F.A.U. RTE.	SECTION	COUNTY	TOTAL SHEETS	SHEET NO.
7448	09-00933-01-BR	MACON	572	560
		CONTRACT NO. XXXX(XXX)		
		ILLINOIS	FED. AID PROJECT	

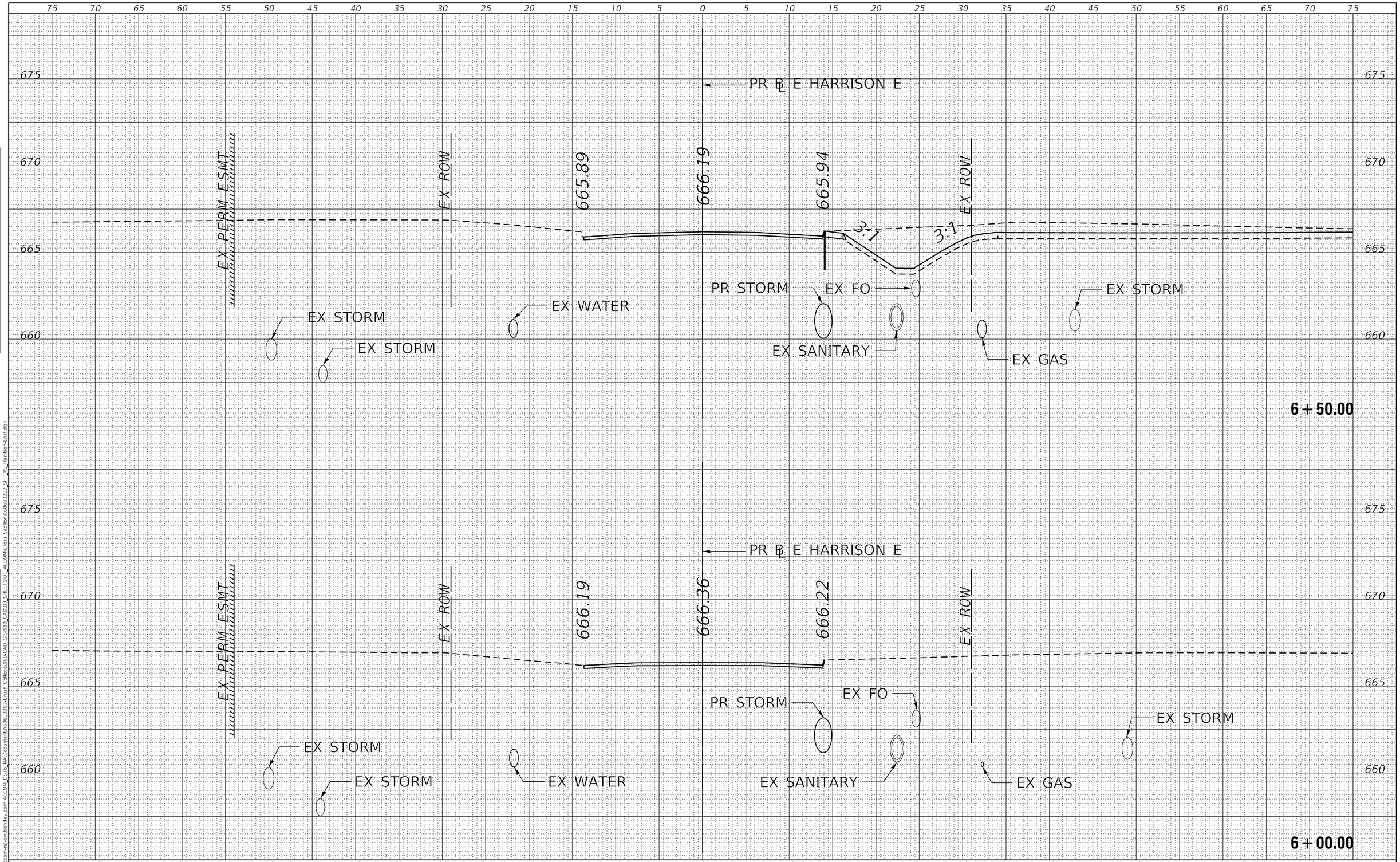

FINAL SURVEY	BY	DATE
SURVEYED		
PLOTTED		
TEMPLATE		
AREAS		
AREAS CHECKED		
NOTE BOOK		
NO.		

ORIGINAL SURVEY	BY	DATE
SURVEYED		
PLOTTED		
TEMPLATE		
AREAS		
AREAS CHECKED		
NOTE BOOK		
NO.		

MODEL: Default
FILE NAME: pw:\\aecom-na-pw.bentley.com:AECOM_DS16_NA\Documents\60603202-Brush College\900-CAD GIS\910_CAD\03_SHEETS\01_AECOM\Cross Sections\60603202_SHT_XS_Harrison-East.dgn

AECOM
345 EAST ASH AVENUE, SUITE B
DECATUR, IL 62526-6161
PHONE: (217) 875-4800 FAX: (217) 875-3577

USER NAME = meron.asnake	DESIGNED - LMB	REVISED -	
	DRAWN - LMB	REVISED -	
PLOT SCALE = 10.0000 ' / in.	CHECKED - WBS	REVISED -	
PLOT DATE = 6/19/2020	DATE - 6/12/2020	REVISED -	

STATE OF ILLINOIS
DEPARTMENT OF TRANSPORTATION

E HARRISON ST (EAST LEG)
CROSS SECTIONS

SCALE: 1"=10H':5V' | SHEET 11 OF 17 SHEETS | STA. 6+00.00 TO STA. 6+50.00

F.A.U. RTE.	SECTION	COUNTY	TOTAL SHEETS	SHEET NO.
7448	09-00933-01-BR	MACON	572	561
		CONTRACT NO. XXXX(XXX)		
		ILLINOIS	FED. AID PROJECT	

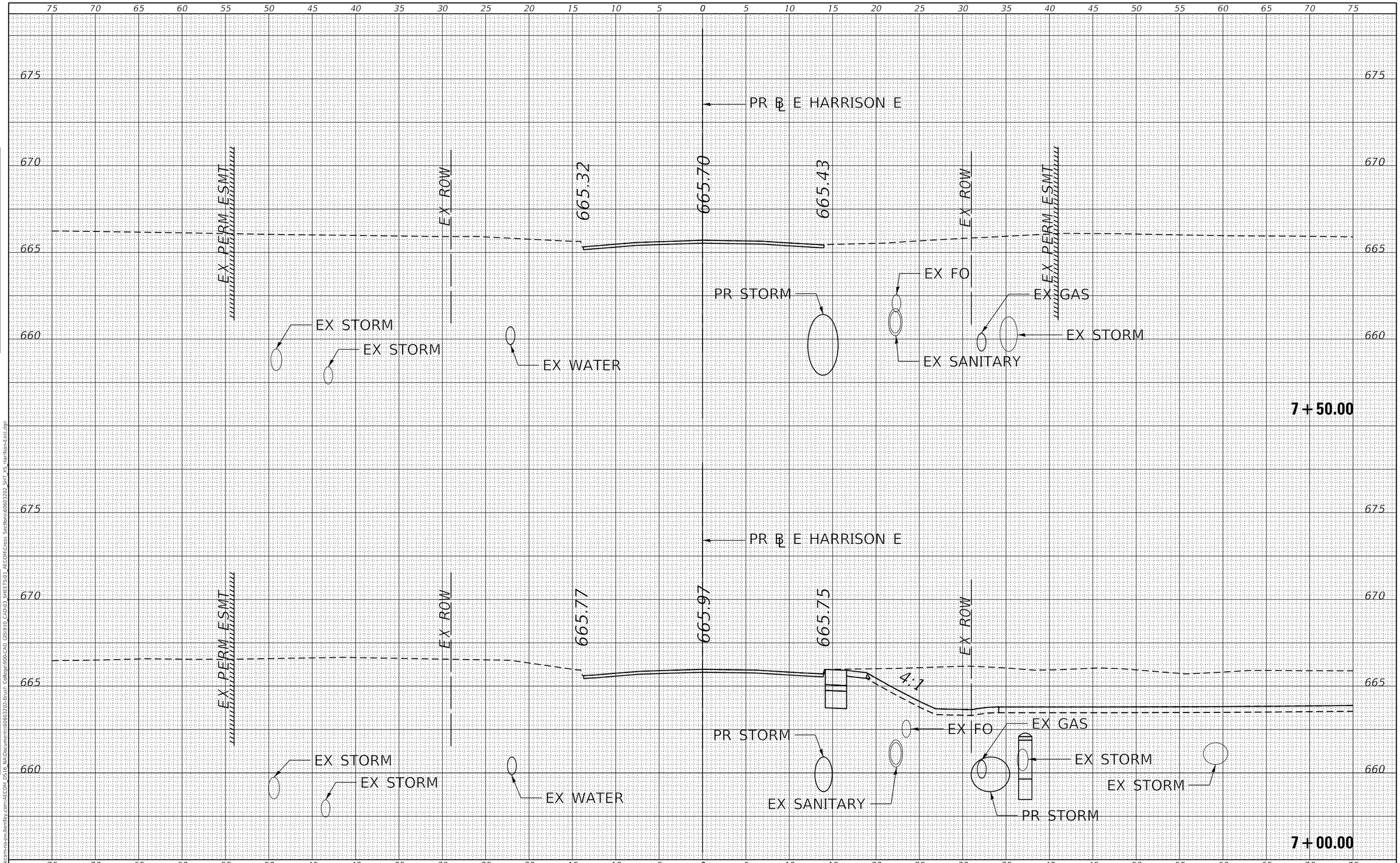

FINAL SURVEY	BY	DATE
SURVEYED		
PLOTTED		
TEMPLATE		
AREAS		
AREAS CHECKED		
NOTE BOOK		
NO.		

ORIGINAL SURVEY	BY	DATE
SURVEYED		
PLOTTED		
TEMPLATE		
AREAS		
AREAS CHECKED		
NOTE BOOK		
NO.		

MODEL: Default
FILE NAME: pw:\\aecom-na-pw.bentley.com:AECOM_DS16_NA\Documents\60603202-Brush College\900-CAD GIS\910_CAD\03_SHEETS\01_AECOM\Cross Sections\60603202_SHT_XS_Harrison-East.dgn

AECOM
345 EAST ASH AVENUE, SUITE B
DECATUR, IL 62526-6161
PHONE: (217) 875-4800 FAX: (217) 875-3577

USER NAME = meron.asnake	DESIGNED - LMB	REVISED -	
	DRAWN - LMB	REVISED -	
PLOT SCALE = 10.0000 ' / in.	CHECKED - WBS	REVISED -	
PLOT DATE = 6/19/2020	DATE - 6/12/2020	REVISED -	

STATE OF ILLINOIS
DEPARTMENT OF TRANSPORTATION

E HARRISON ST (EAST LEG)
CROSS SECTIONS

SCALE: 1"=10H':5V' | SHEET 12 OF 17 SHEETS | STA. 7+00.00 TO STA. 7+50.00

F.A.U. RTE.	SECTION	COUNTY	TOTAL SHEETS	SHEET NO.
7448	09-00933-01-BR	MACON	572	562
		CONTRACT NO. XXXX(XXX)		
		ILLINOIS	FED. AID PROJECT	

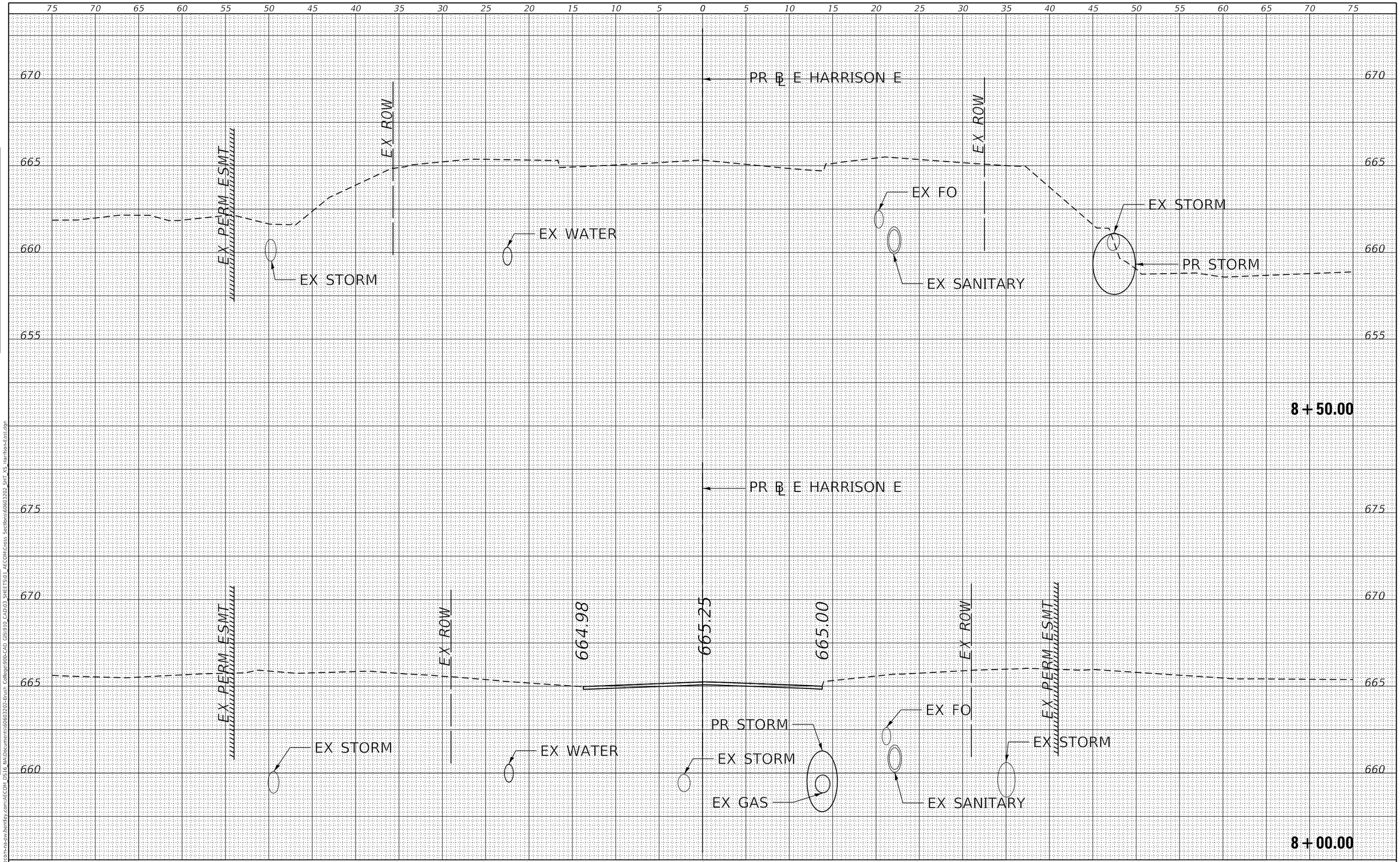

FINAL SURVEY	BY	DATE
SURVEYED		
PLOTTED		
TEMPLATE		
AREAS		
AREAS CHECKED		
NOTE BOOK		
NO.		

ORIGINAL SURVEY	BY	DATE
SURVEYED		
PLOTTED		
TEMPLATE		
AREAS		
AREAS CHECKED		
NOTE BOOK		
NO.		

MODEL: Default
FILE NAME: pw:\\aecom-na-pw.bentley.com:AECOM_DS16_NA\Documents\60603202-Brush College\900-CAD GIS\910_CAD\03_SHEETS\01_AECOM\Cross Sections\60603202_SHT_XS_Harrison-East.dgn

AECOM
345 EAST ASH AVENUE, SUITE B
DECATUR, IL 62526-6161
PHONE: (217) 875-4800 FAX: (217) 875-3577

USER NAME = meron.asnake	DESIGNED - LMB	REVISED -	
	DRAWN - LMB	REVISED -	
PLOT SCALE = 10.0000 ' / in.	CHECKED - WBS	REVISED -	
PLOT DATE = 6/19/2020	DATE - 6/12/2020	REVISED -	

STATE OF ILLINOIS
DEPARTMENT OF TRANSPORTATION

E HARRISON ST (EAST LEG)
CROSS SECTIONS

SCALE: 1"=10H':5V' | SHEET 13 OF 17 SHEETS | STA. 8+00.00 TO STA. 8+50.00

F.A.U. RTE.	SECTION	COUNTY	TOTAL SHEETS	SHEET NO.
7448	09-00933-01-BR	MACON	572	563
		CONTRACT NO. XXXX(XXX)		
		ILLINOIS	FED. AID PROJECT	

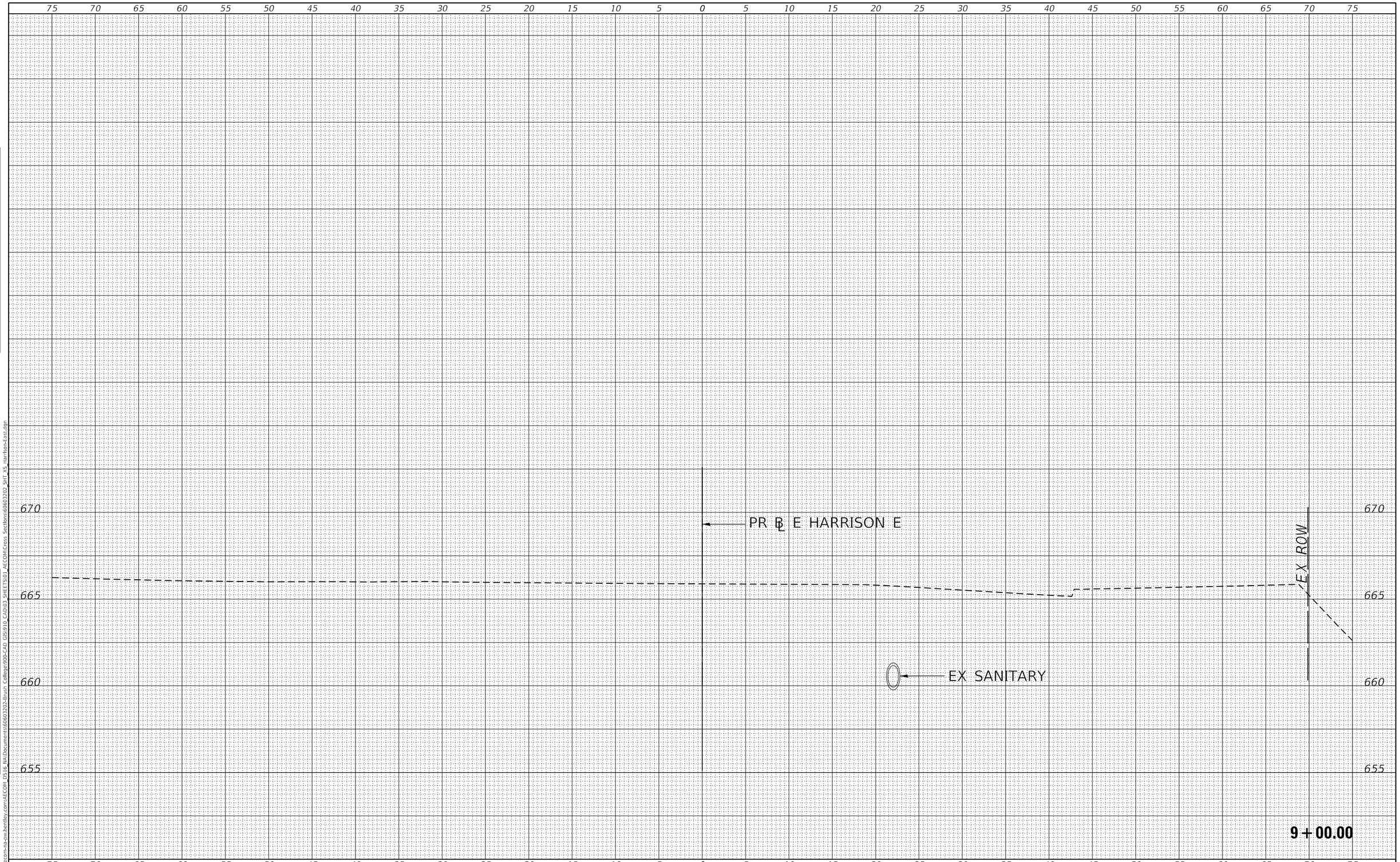

FINAL SURVEY	BY	DATE
SURVEYED		
PLOTTED		
TEMPLATE		
AREAS		
AREAS CHECKED		
NOTE BOOK		
NO.		

ORIGINAL SURVEY	BY	DATE
SURVEYED		
PLOTTED		
TEMPLATE		
AREAS		
AREAS CHECKED		
NOTE BOOK		
NO.		

MODEL: Default
FILE NAME: pw:\\aecom-na-pw.bentley.com:AECOM_DS16_NA\Documents\60603202-Brush College\900-CAD GIS\910_CAD\03_SHEETS\01_AECOM\Cross Sections\60603202_SHT_XS_Harrison-East.dgn

AECOM
345 EAST ASH AVENUE, SUITE B
DECATUR, IL 62526-6161
PHONE: (217) 875-4800 FAX: (217) 875-3577

USER NAME = meron.asnake	DESIGNED - LMB	REVISED -	
	DRAWN - LMB	REVISED -	
PLOT SCALE = 10.0000 ' / in.	CHECKED - WBS	REVISED -	
PLOT DATE = 6/19/2020	DATE - 6/12/2020	REVISED -	

STATE OF ILLINOIS
DEPARTMENT OF TRANSPORTATION

E HARRISON ST (EAST LEG)
CROSS SECTIONS

SCALE: 1"=10H':5V' | SHEET 14 OF 17 SHEETS | STA. 9+00.00 TO STA. 9+00.00

F.A.U. RTE.	SECTION	COUNTY	TOTAL SHEETS	SHEET NO.
7448	09-00933-01-BR	MACON	572	564
		CONTRACT NO. XXXX(XXX)		
		ILLINOIS	FED. AID PROJECT	

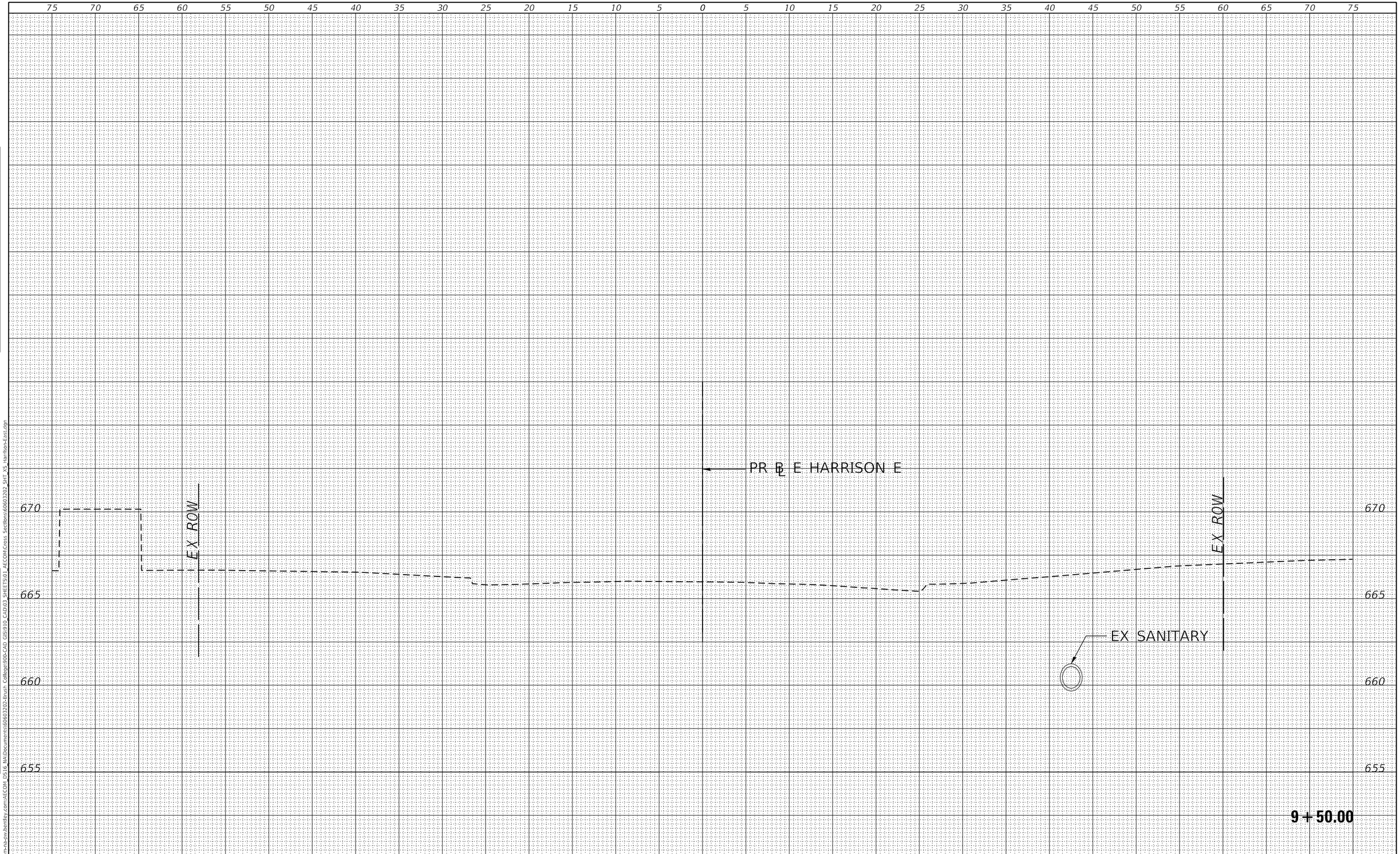

FINAL SURVEY	BY	DATE
SURVEYED		
PLOTTED		
TEMPLATE		
AREAS		
AREAS CHECKED		
NOTE BOOK		
NO.		

ORIGINAL SURVEY	BY	DATE
SURVEYED		
PLOTTED		
TEMPLATE		
AREAS		
AREAS CHECKED		
NOTE BOOK		
NO.		

MODEL: Default
FILE NAME: pw:\\aecom-na-pw.bentley.com:AECOM DS16 NA\Documents\60603202-Brush College\900-CAD GIS\910_CAD\03 SHEETS\01 AECOM\Cross Sections\60603202 SHT XS Harrison-East.dgn

AECOM
345 EAST ASH AVENUE, SUITE B
DECATUR, IL 62526-6161
PHONE: (217) 875-4800 FAX: (217) 875-3577

USER NAME = meron.asnake	DESIGNED - LMB	REVISED -	
	DRAWN - LMB	REVISED -	
PLOT SCALE = 10.0000 ' / in.	CHECKED - WBS	REVISED -	
PLOT DATE = 6/19/2020	DATE - 6/12/2020	REVISED -	

STATE OF ILLINOIS
DEPARTMENT OF TRANSPORTATION

E HARRISON ST (EAST LEG)
CROSS SECTIONS

SCALE: 1"=10H':5V' | SHEET 15 OF 17 SHEETS | STA. 9+50.00 TO STA. 9+50.00

F.A.U. RTE.	SECTION	COUNTY	TOTAL SHEETS	SHEET NO.
7448	09-00933-01-BR	MACON	572	565
		CONTRACT NO. XXXX(XXX)		
		ILLINOIS	FED. AID PROJECT	

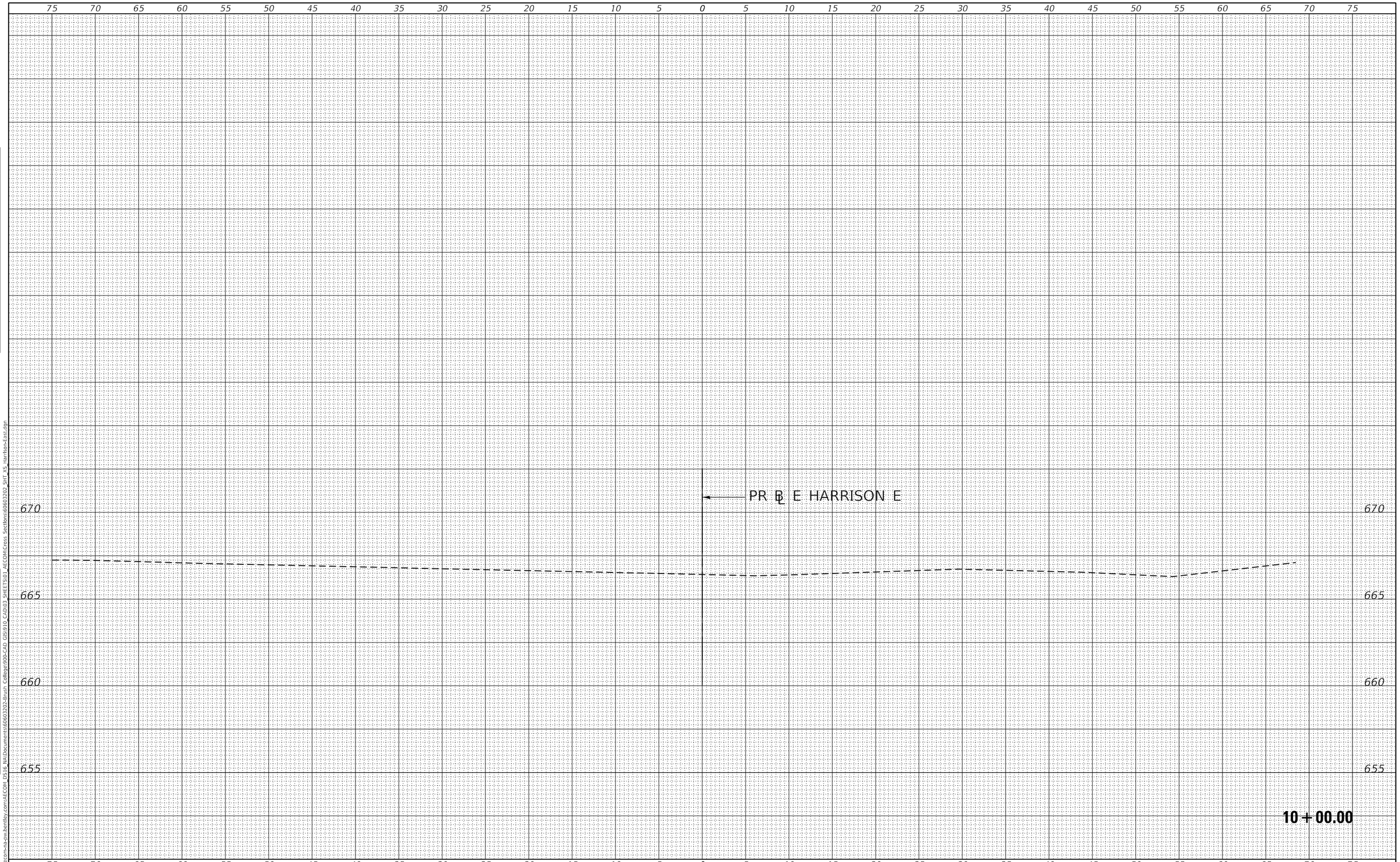

FINAL SURVEY	BY	DATE
SURVEYED		
PLOTTED		
TEMPLATE		
AREAS		
AREAS CHECKED		
NOTE BOOK		
NO.		

ORIGINAL SURVEY	BY	DATE
SURVEYED		
PLOTTED		
TEMPLATE		
AREAS		
AREAS CHECKED		
NOTE BOOK		
NO.		

MODEL: Default
FILE NAME: pw:\\aecom-na-pw.bentley.com:AECOM_DS16_NA\Documents\60603202-Brush College\900-CAD GIS\910_CAD\03_SHEETS\01_AECOM\Cross Sections\60603202_SHT_XS_Harrison-East.dgn

AECOM
345 EAST ASH AVENUE, SUITE B
DECATUR, IL 62526-6161
PHONE: (217) 875-4800 FAX: (217) 875-3577

USER NAME = meron.asnake	DESIGNED - LMB	REVISED -	
	DRAWN - LMB	REVISED -	
PLOT SCALE = 10.0000 ' / in.	CHECKED - WBS	REVISED -	
PLOT DATE = 6/19/2020	DATE - 6/12/2020	REVISED -	

STATE OF ILLINOIS
DEPARTMENT OF TRANSPORTATION

E HARRISON ST (EAST LEG)
CROSS SECTIONS

SCALE: 1"=10H':5V' | SHEET 16 OF 17 SHEETS | STA. 10+00.00 TO STA. 10+00.00

F.A.U. RTE.	SECTION	COUNTY	TOTAL SHEETS	SHEET NO.
7448	09-00933-01-BR	MACON	572	566
		CONTRACT NO. XXXX(XXX)		
		ILLINOIS	FED. AID PROJECT	

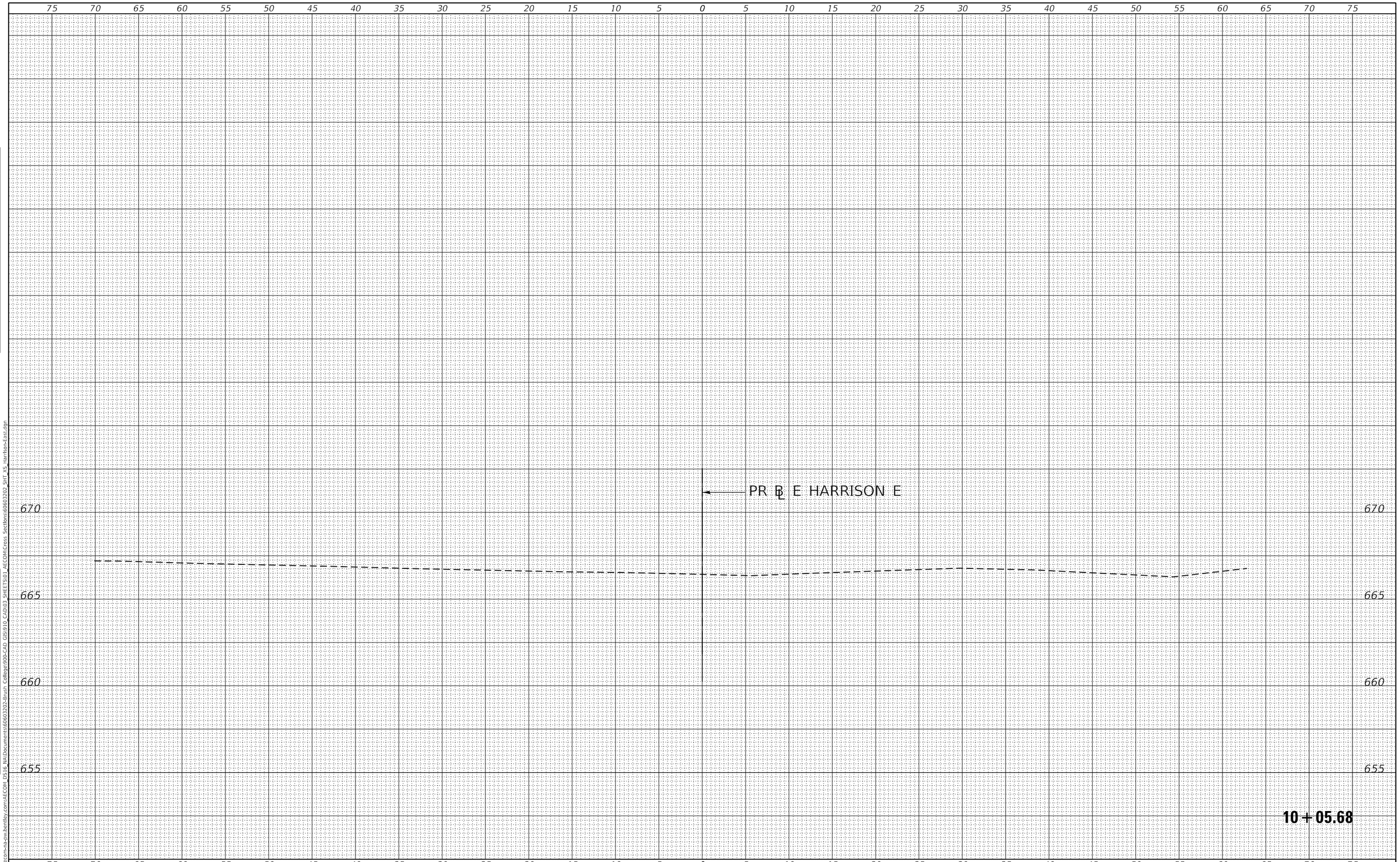

FINAL SURVEY	BY	DATE
SURVEYED		
PLOTTED		
TEMPLATE		
AREAS		
AREAS CHECKED		
NOTE BOOK		
NO.		

ORIGINAL SURVEY	BY	DATE
SURVEYED		
PLOTTED		
TEMPLATE		
AREAS		
AREAS CHECKED		
NOTE BOOK		
NO.		

MODEL: Default
FILE NAME: pw:\\aecom-na-pw.bentley.com:AECOM_DS16_NA\Documents\60603202-Brush College\900-CAD GIS\910_CAD\03_SHEETS\01_AECOM\Cross Sections\60603202_SHT_XS_Harrison-East.dgn

AECOM
345 EAST ASH AVENUE, SUITE B
DECATUR, IL 62526-6161
PHONE: (217) 875-4800 FAX: (217) 875-3577

USER NAME = meron.asnake	DESIGNED -	REVISED -
	DRAWN -	REVISED -
PLOT SCALE = 10.0000 ' / in.	CHECKED -	REVISED -
PLOT DATE = 6/19/2020	DATE -	REVISED -

STATE OF ILLINOIS
DEPARTMENT OF TRANSPORTATION

E HARRISON ST (EAST LEG)
CROSS SECTIONS

SCALE: 1"=10H':5V' | SHEET 17 OF 17 SHEETS | STA. 10+05.68 TO STA. 10+05.68

F.A.U. RTE.	SECTION	COUNTY	TOTAL SHEETS	SHEET NO.
7448	09-00933-01-BR	MACON	572	567
		CONTRACT NO. XXXX(XXX)		
		ILLINOIS	FED. AID PROJECT	

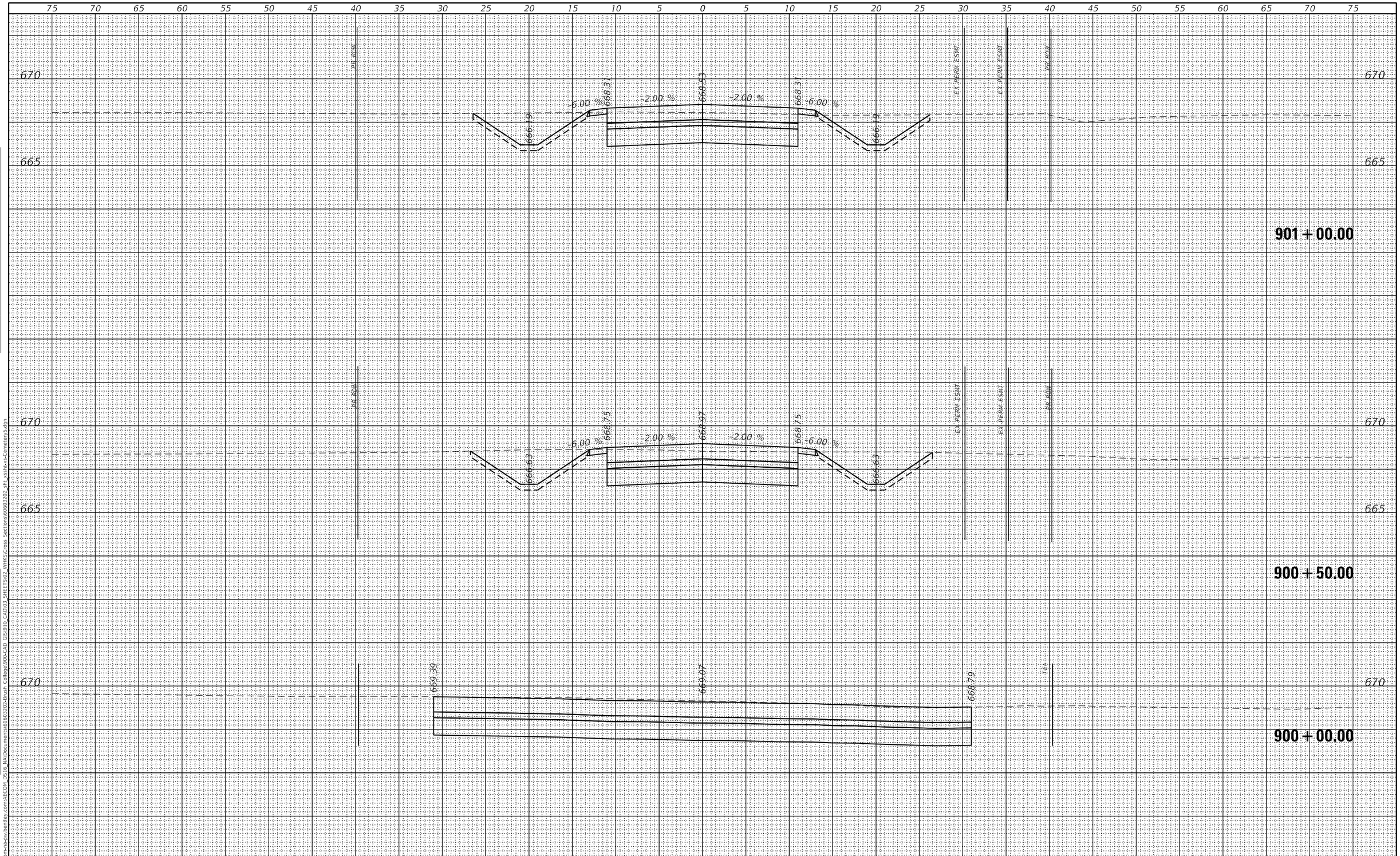

FINAL SURVEY		BY	DATE
NOTE BOOK	SURVEYED		
	PLOTTED		
	TEMPLATE		
	AREAS		
NO.	AREAS CHECKED		

ORIGINAL SURVEY		BY	DATE
NOTE BOOK	SURVEYED		
	PLOTTED		
	TEMPLATE		
	AREAS		
NO.	AREAS CHECKED		

MODEL: Default
FILE NAME: pw:\\aecom-na-pw.bentley.com:AECOM DS16 NA\Documents\60603202-Brush College\900-CAD GIS\910 CAD\03 SHEETS\02 WHKS\Cross Sections\60603202_sht_xssln-ts-CemeteryS.dgn

design firm no. 184001036
whks
engineers + planners + land surveyors

USER NAME = $OPERATOR$	DESIGNED - -	REVISED	
	CHECKED - -	REVISED	
PLOT SCALE = 10.0000 ' / in.	DRAWN - -	REVISED	
PLOT DATE = 6/17/2020	CHECKED - -	REVISED	

STATE OF ILLINOIS
DEPARTMENT OF TRANSPORTATION

CEMETERY ACCESS
CROSS SECTIONS

SCALE: 1" = 5' | SHEET 1 OF 5 SHEETS | STA. 900+00.00 TO STA. 901+00.00

F.A.U. RTE.	SECTION	COUNTY	TOTAL SHEETS	SHEET NO.
7448	09-00933-01-BR	MACON	572	568

CONTRACT NO. 6WGY(165)
ILLINOIS | FED. AID PROJECT

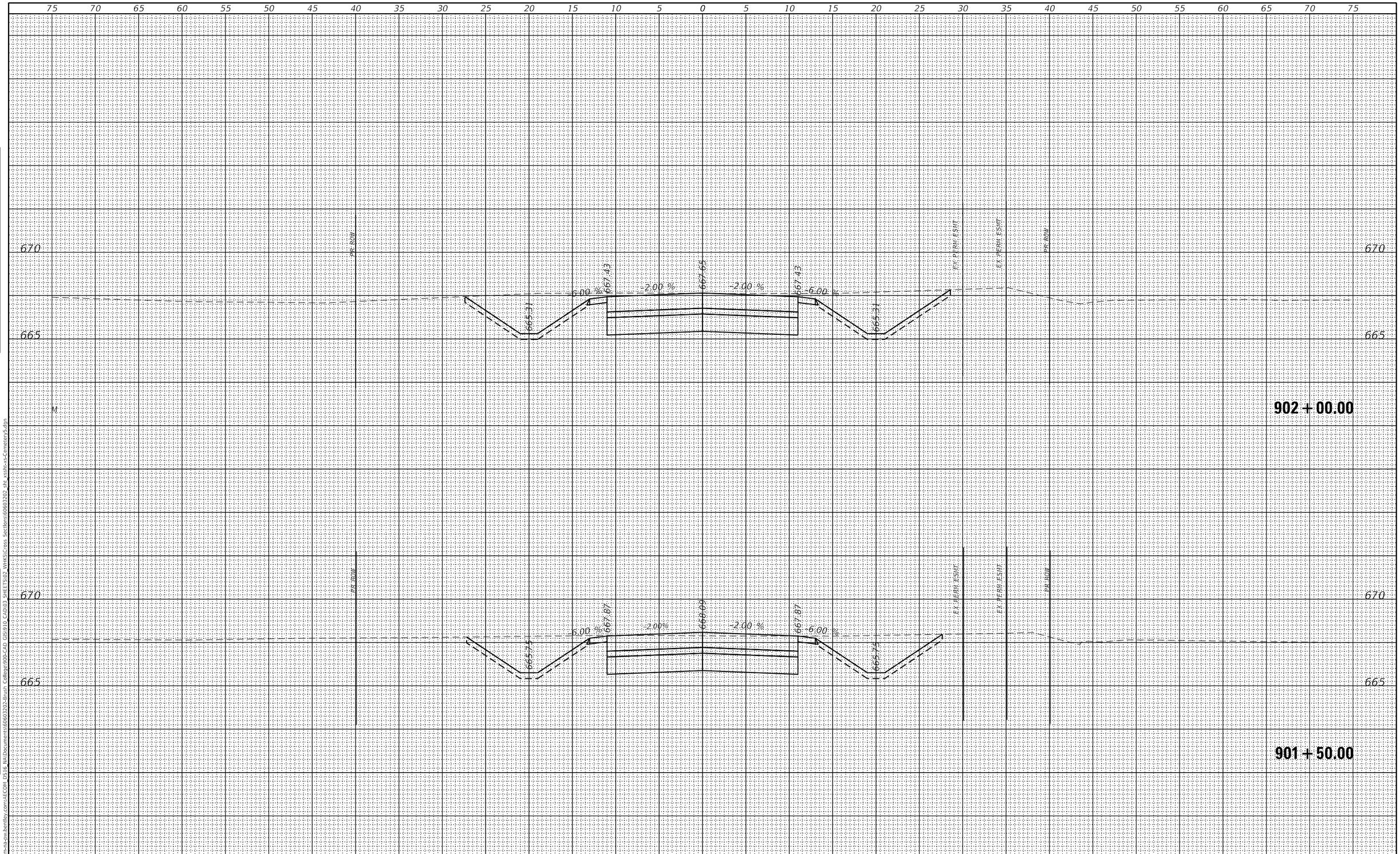

FINAL SURVEY		BY	DATE
NOTE BOOK	SURVEYED		
	PLOTTED		
	TEMPLATE		
	AREAS		
NO.	AREAS CHECKED		

ORIGINAL SURVEY		BY	DATE
NOTE BOOK	SURVEYED		
	PLOTTED		
	TEMPLATE		
	AREAS		
NO.	AREAS CHECKED		

MODEL: Default
FILE NAME: pw:\\aecom-na-sw.bentley.com:AECOM DS16 NA\Documents\60603202-Brush College\90b-CAD GIS\910 CAD\03 SHEETS\02 VHKS\Cross Sections\60603202 sht xssht-xs-CemeteryS.dgn

design firm no. 184001036
whks
engineers + planners + land surveyors

USER NAME = $OPERATOR$	DESIGNED - -	REVISED	
	CHECKED - -	REVISED	
PLOT SCALE = 10.0000 ' / in.	DRAWN - -	REVISED	
PLOT DATE = 6/17/2020	CHECKED - -	REVISED	

STATE OF ILLINOIS
DEPARTMENT OF TRANSPORTATION

CEMETERY ACCESS
CROSS SECTIONS

SCALE: 1" = 5' | SHEET 2 OF 5 SHEETS | STA. 901+50.00 TO STA. 902+00.00

F.A.U. RTE.	SECTION	COUNTY	TOTAL SHEETS	SHEET NO.
7448	09-00933-01-BR	MACON	572	569

CONTRACT NO. 6WGY(165)

ILLINOIS | FED. AID PROJECT

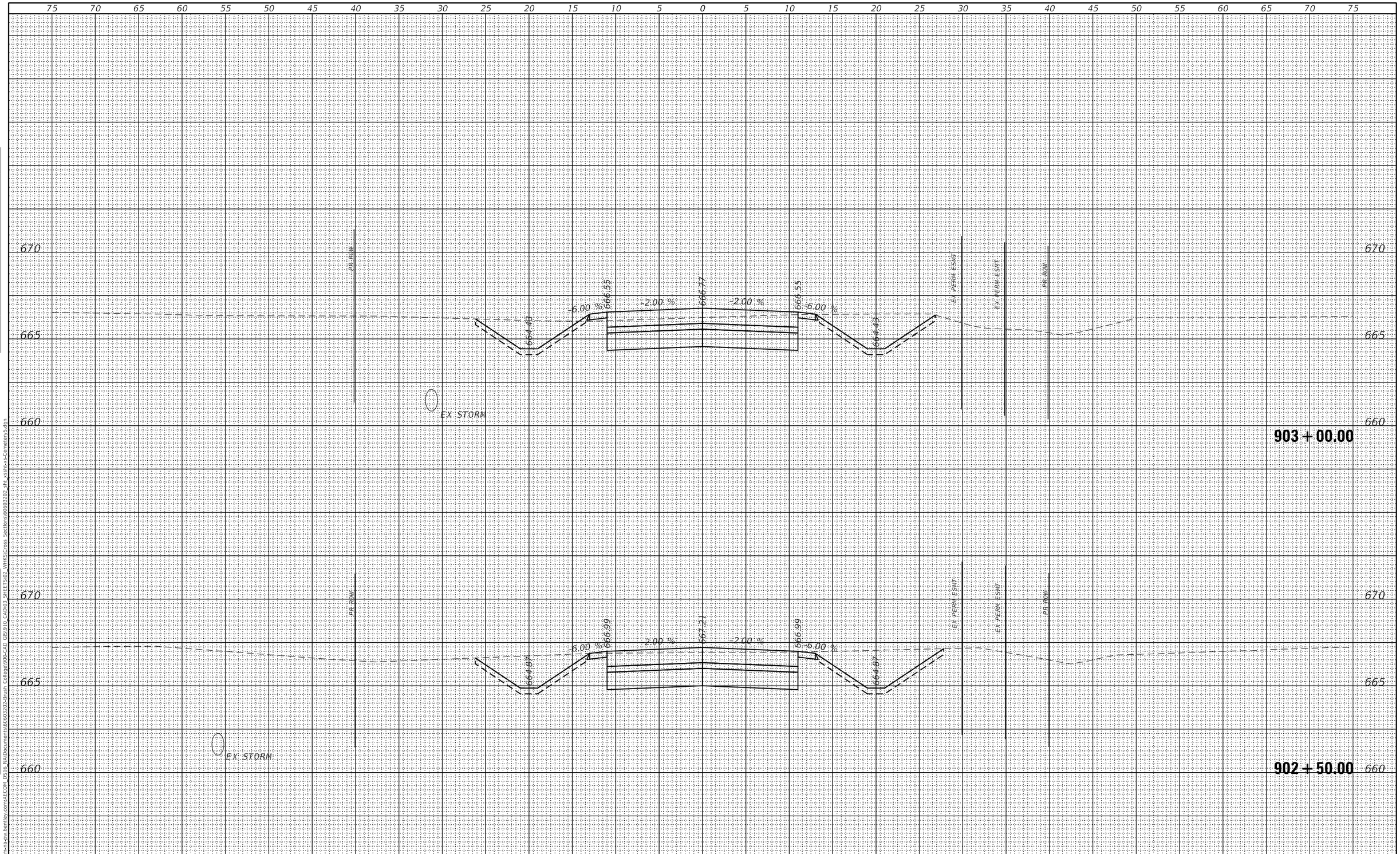

FINAL SURVEY		BY	DATE
NOTE BOOK	SURVEYED		
	PLOTTED		
	TEMPLATE		
	AREAS		
NO.	AREAS CHECKED		

ORIGINAL SURVEY		BY	DATE
NOTE BOOK	SURVEYED		
	PLOTTED		
	TEMPLATE		
	AREAS		
NO.	AREAS CHECKED		

MODEL: Default
FILE NAME: pw:\\aecom-na-pw.bentley.com:AECOM DS16 NA\Documents\60603202-Brush College 90b-CAD GIS\910 CAD\03 SHEETS\02 VHKS\Cross Sections\60603202 sht xssht-xs-Cemetery5.dgn

design firm no. 184001036
whks
engineers + planners + land surveyors

USER NAME = $OPERATOR$	DESIGNED - -	REVISED
	CHECKED - -	REVISED
PLOT SCALE = 10.0000 ' / in.	DRAWN - -	REVISED
PLOT DATE = 6/17/2020	CHECKED - -	REVISED

STATE OF ILLINOIS
DEPARTMENT OF TRANSPORTATION

CEMETERY ACCESS
CROSS SECTIONS

SCALE: 1" = 5' | SHEET 3 OF 5 SHEETS | STA. 902+50.00 TO STA. 903+00.00

F.A.U. RTE.	SECTION	COUNTY	TOTAL SHEETS	SHEET NO.
7448	09-00933-01-BR	MACON	572	570

CONTRACT NO. 6WGY(165)

ILLINOIS | FED. AID PROJECT

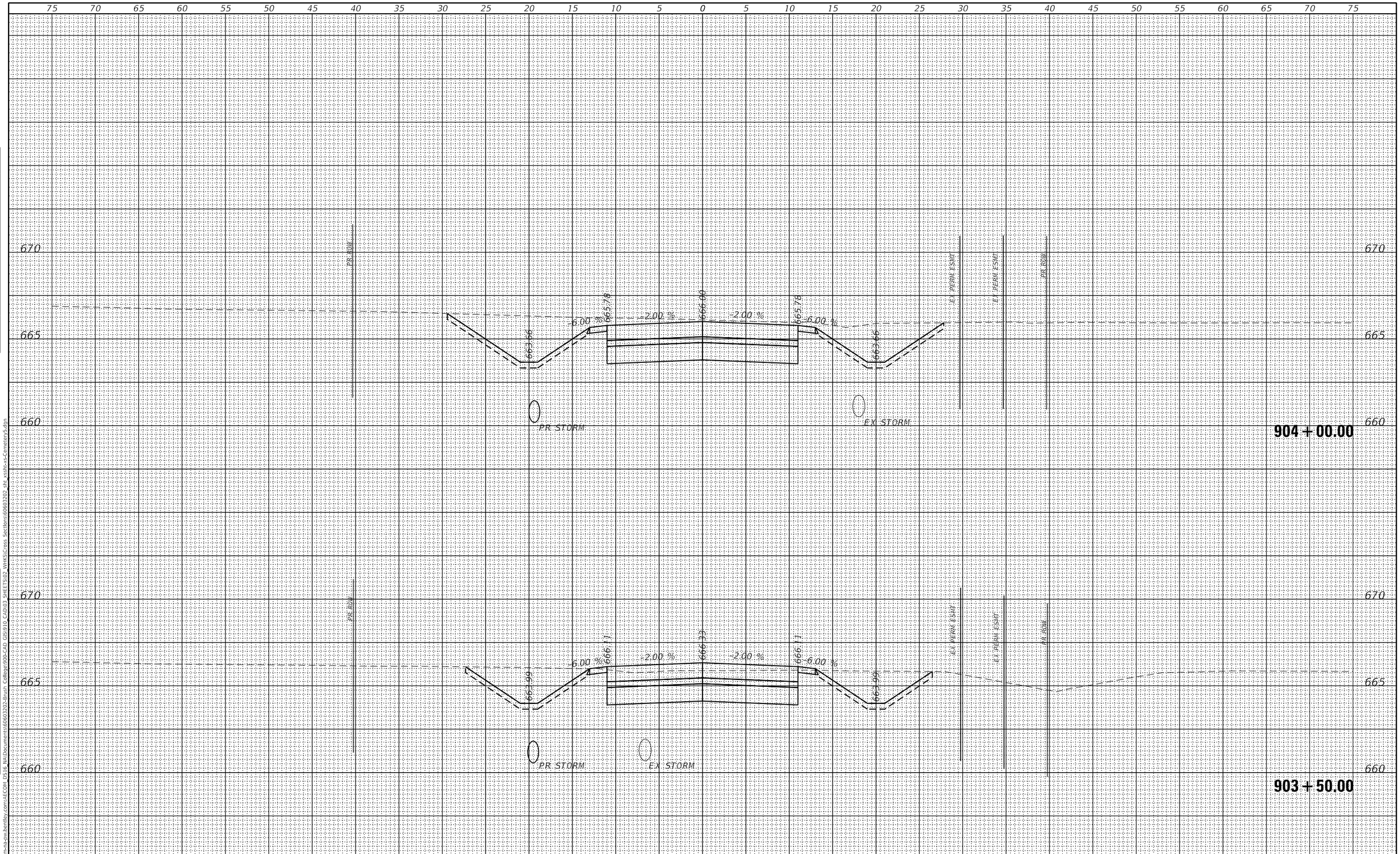

FINAL SURVEY		BY	DATE
NOTE BOOK	SURVEYED		
	PLOTTED		
	TEMPLATE		
	AREAS		
	AREAS CHECKED		
NO.			

ORIGINAL SURVEY		BY	DATE
NOTE BOOK	SURVEYED		
	PLOTTED		
	TEMPLATE		
	AREAS		
	AREAS CHECKED		
NO.			

MODEL: Default
FILE NAME: pw:\\aecom-na-sw.bentley.com:AECOM DS16 NA\Documents\60603202-Brush College 90b-CAD GIS\910 CAD\03 SHEETS\02 VHKS\Cross Sections\60603202_sht_xssht-xs-Cemetery5.dgn

design firm no. 184001036
whks
engineers + planners + land surveyors

USER NAME = $OPERATOR$	DESIGNED - -	REVISED
	CHECKED - -	REVISED
PLOT SCALE = 10.0000 ' / in.	DRAWN - -	REVISED
PLOT DATE = 6/17/2020	CHECKED - -	REVISED

STATE OF ILLINOIS
DEPARTMENT OF TRANSPORTATION

CEMETERY ACCESS
CROSS SECTIONS

SCALE: 1" = 5' | SHEET 4 OF 5 SHEETS | STA. 903+50.00 TO STA. 904+00.00

F.A.U. RTE.	SECTION	COUNTY	TOTAL SHEETS	SHEET NO.
7448	09-00933-01-BR	MACON	572	571

CONTRACT NO. 6WGY(165)

ILLINOIS | FED. AID PROJECT

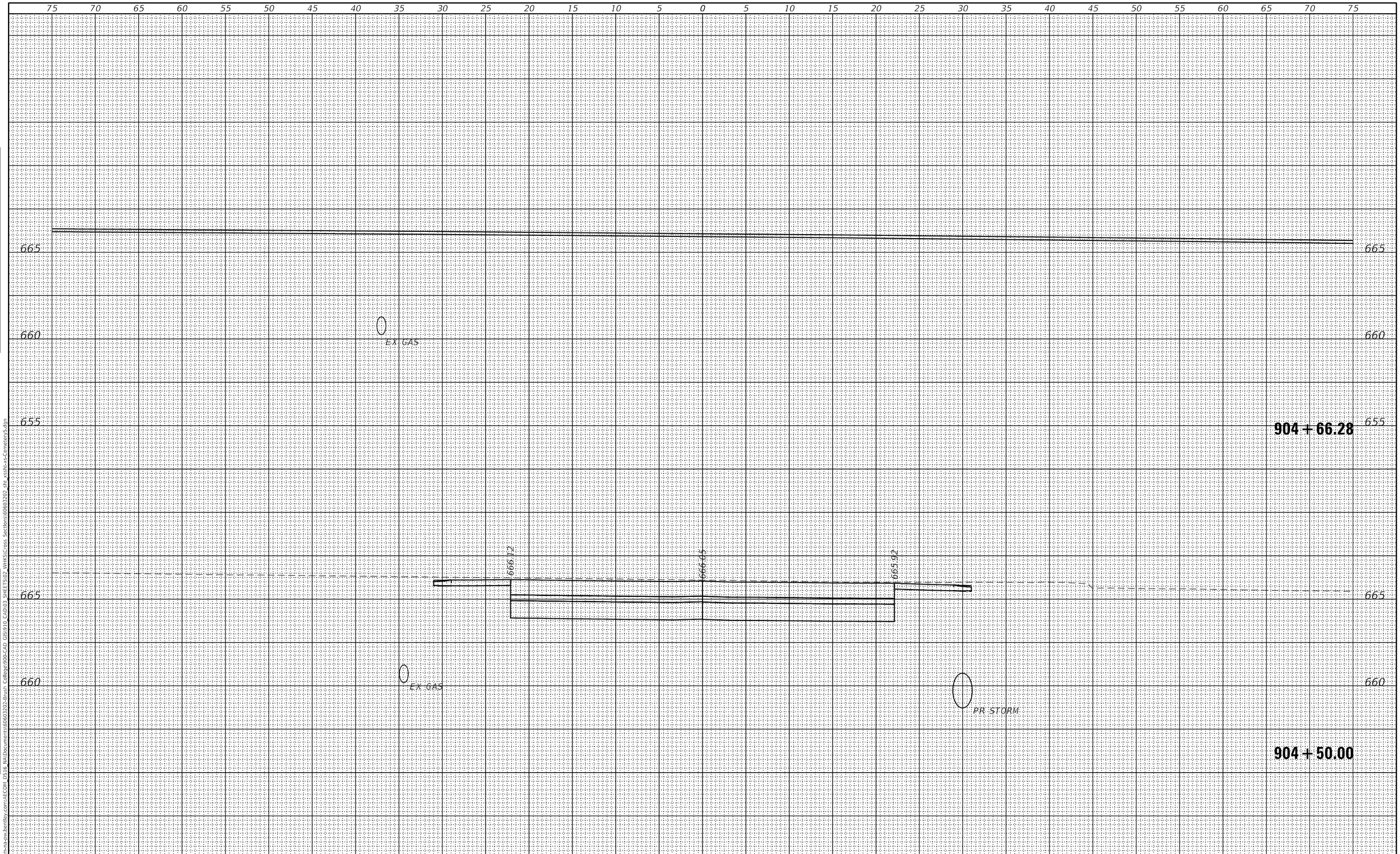

FINAL SURVEY	BY	DATE
SURVEYED		
PLOTTED		
TEMPLATE		
AREAS		
AREAS CHECKED		
NOTE BOOK		
NO.		

ORIGINAL SURVEY	BY	DATE
SURVEYED		
PLOTTED		
TEMPLATE		
AREAS		
AREAS CHECKED		
NOTE BOOK		
NO.		

MODEL: Default
FILE NAME: pw:\\aecom-na-sw.bentley.com:AECOM DS16 NA\Documents\60603202-Brush College90b-CAD GIS\910 CAD\03 SHEETS\02 VHKS\Cross Sections\60603202 sht xsshc-xs-Cemetery5.dgn

design firm no. 184001036
whks
engineers + planners + land surveyors

USER NAME = $OPERATOR$	DESIGNED - -	REVISED	
	CHECKED - -	REVISED	
PLOT SCALE = 10.0000 ' / in.	DRAWN - -	REVISED	
PLOT DATE = 6/17/2020	CHECKED - -	REVISED	

STATE OF ILLINOIS
DEPARTMENT OF TRANSPORTATION

CEMETERY ACCESS
CROSS SECTIONS

SCALE: 1" = 5' | SHEET 5 OF 5 SHEETS | STA. 904+50.00 TO STA. 904+66.28

F.A.U. RTE.	SECTION	COUNTY	TOTAL SHEETS	SHEET NO.
7448	09-00933-01-BR	MACON	572	572

CONTRACT NO. 6WGY(165)

ILLINOIS | FED. AID PROJECT