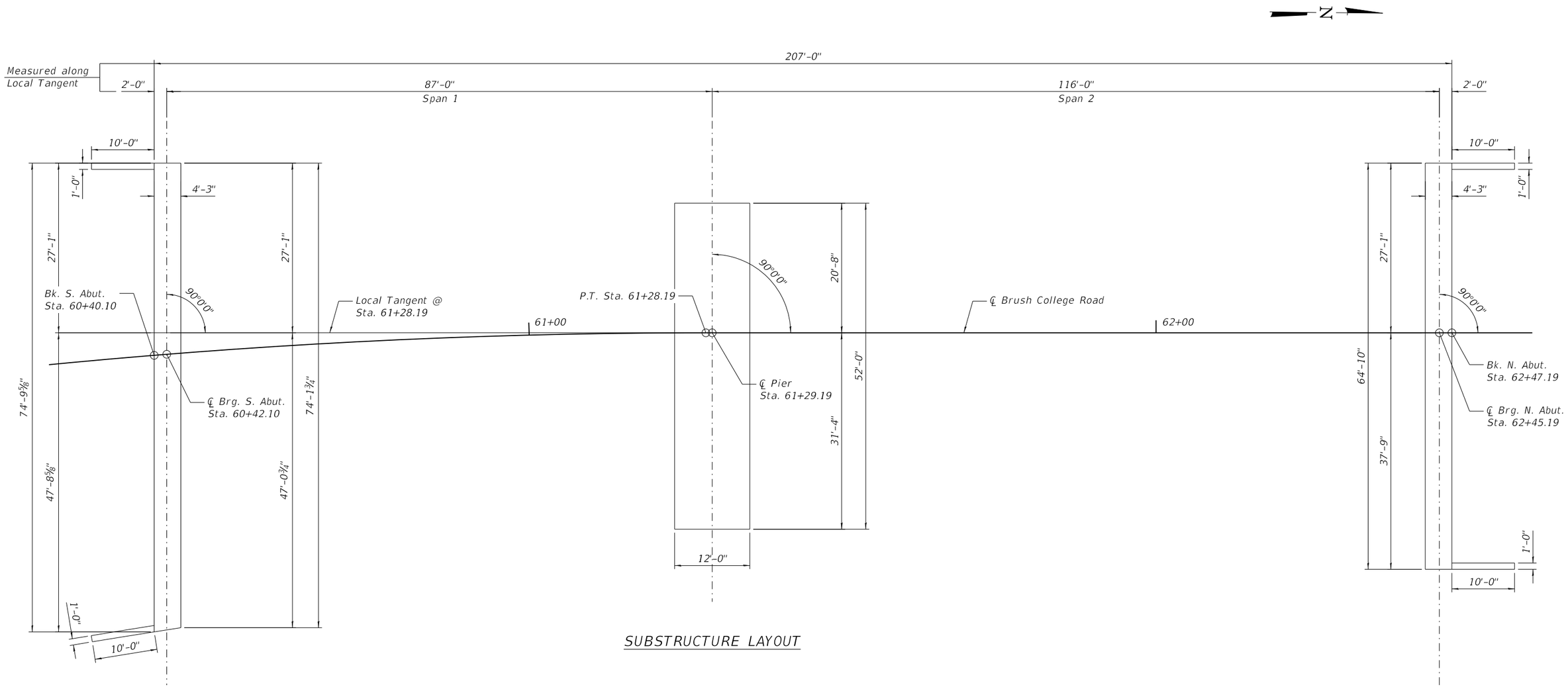

SUBSTRUCTURE LAYOUT

MODEL: Sheet
FILE NAME: pw:\\aecom-na-pw.bentley.com:AECOM_DS16_NA\Documents\60603202-Brush College\900-CAD GIS\910_CAD\03_SHEETS\01_AECOM\Structural\60603202_S-03_Substructure-Layout.dgn

AECOM	USER NAME = elif.ulger	DESIGNED - MCC	REVISED -	STATE OF ILLINOIS DEPARTMENT OF TRANSPORTATION	SUBSTRUCTURE LAYOUT STRUCTURE NO. 058-9202	F.A.U. RTE.	SECTION	COUNTY	TOTAL SHEETS / SHEET NO.
		CHECKED -	REVISED -			7448	09-00933-01-BR	MACON	572 / 388
	PLOT SCALE = N.T.S.	DRAWN - MCC	REVISED -					CONTRACT NO. XXXX(XXX)	
	PLOT DATE = 6/19/2020	CHECKED -	REVISED -				ILLINOIS	FED. AID PROJECT	

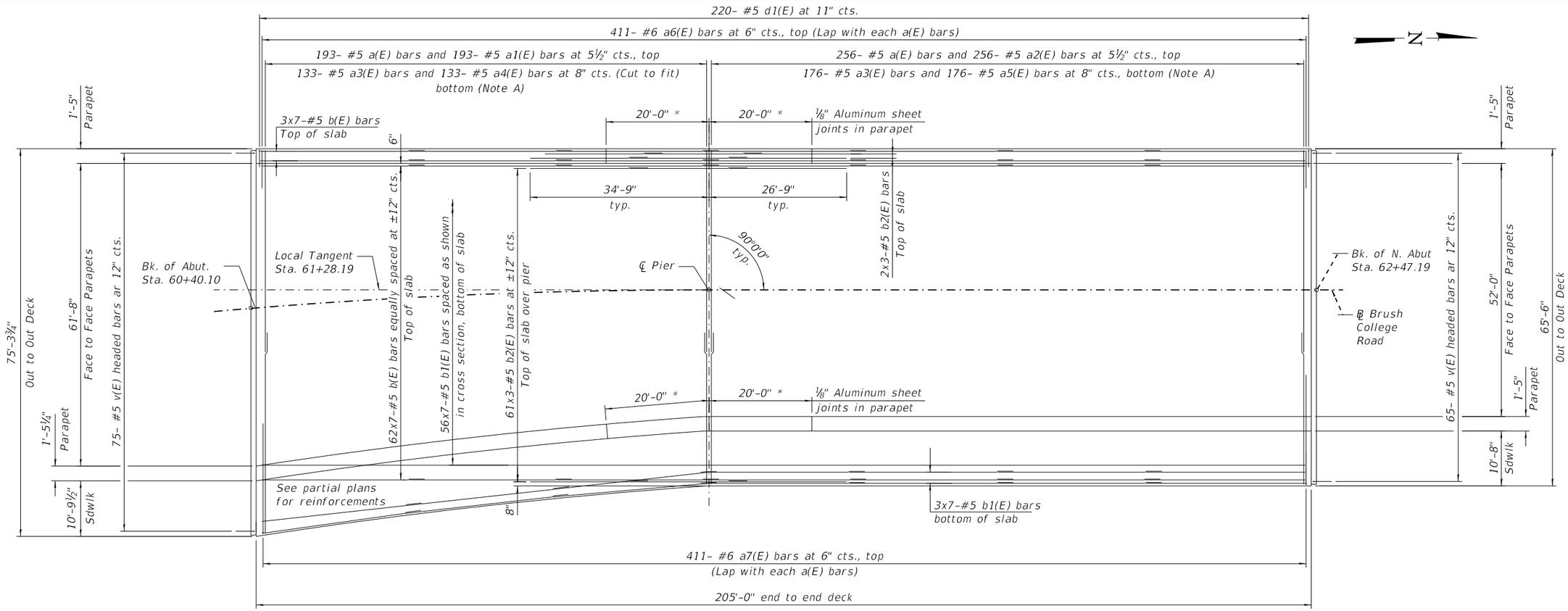

PLAN

* Dimensions along front face of parapet

NOTE A:

Do not lap two adjecent a1(E) and a2(E) bars at the same location

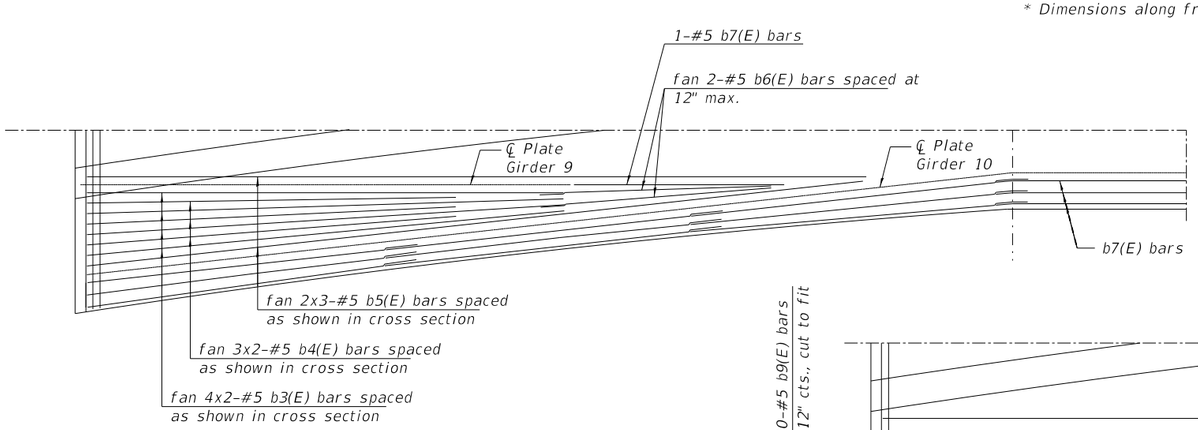

PARTIAL PLAN - BOTTOM REINFORCEMENTS

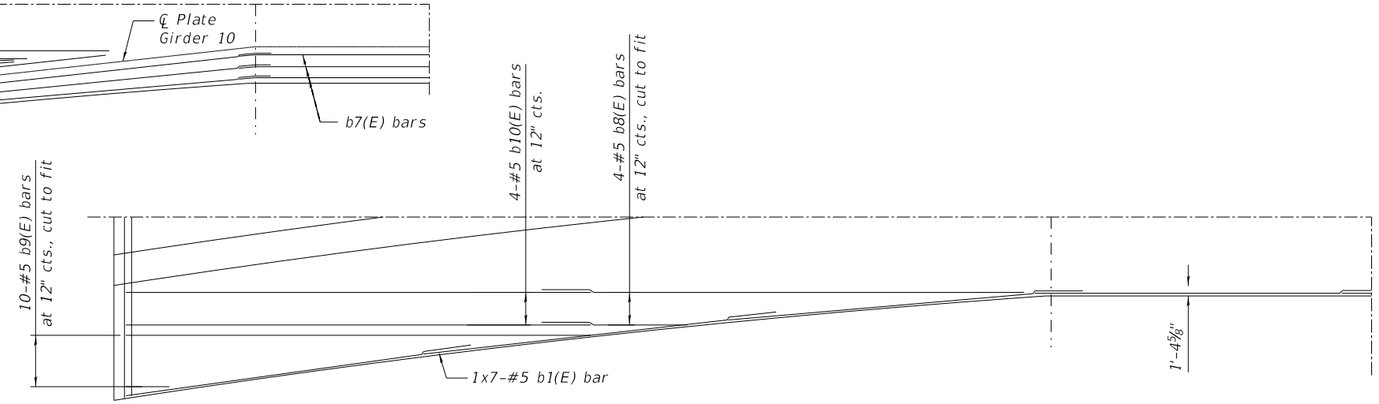

PARTIAL PLAN - TOP REINFORCEMENTS

AECOM	USER NAME = elif.ulger	DESIGNED - IIP	REVISED -	STATE OF ILLINOIS DEPARTMENT OF TRANSPORTATION	SUPERSTRUCTURE STRUCTURE NO. 058-9202	F.A.U. RTE.	SECTION	COUNTY	TOTAL SHEETS	SHEET NO.
		CHECKED -	REVISED -			7448	09-00933-01-BR	MACON	572	389
	PLOT SCALE = N.T.S.	DRAWN - IIP	REVISED -					CONTRACT NO. XXXX(XXX)		
	PLOT DATE = 6/19/2020	CHECKED -	REVISED -				ILLINOIS	FED. AID PROJECT		

MODEL: Sheet
FILE NAME: pw:\\aecom-na-pw.bentley.com:AECOM_DS16_NA\Documents\60603202-Brush College\900-CAD GIS\910_CAD\03_SHEETS\01_AECOM\Structural\60603202_S-09_Superstructure.dgn

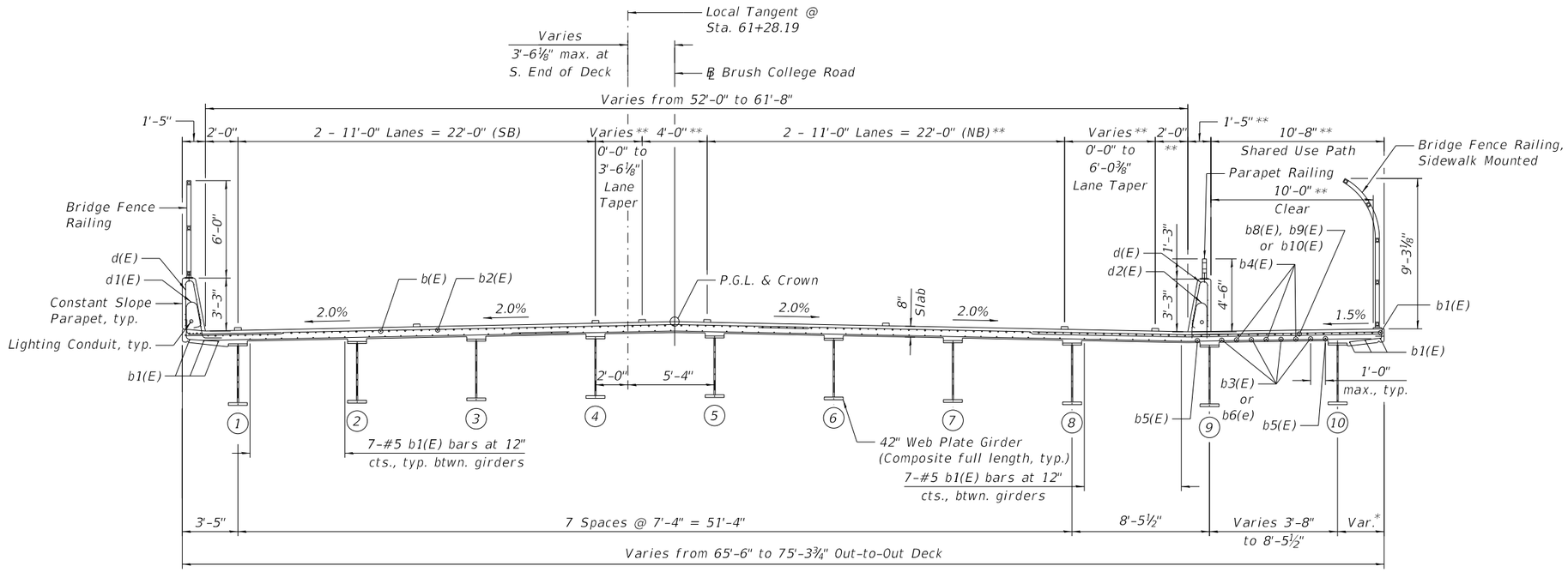

CROSS SECTION

(Looking North)
Sta. 60+41.10 to Sta. 61+28.19

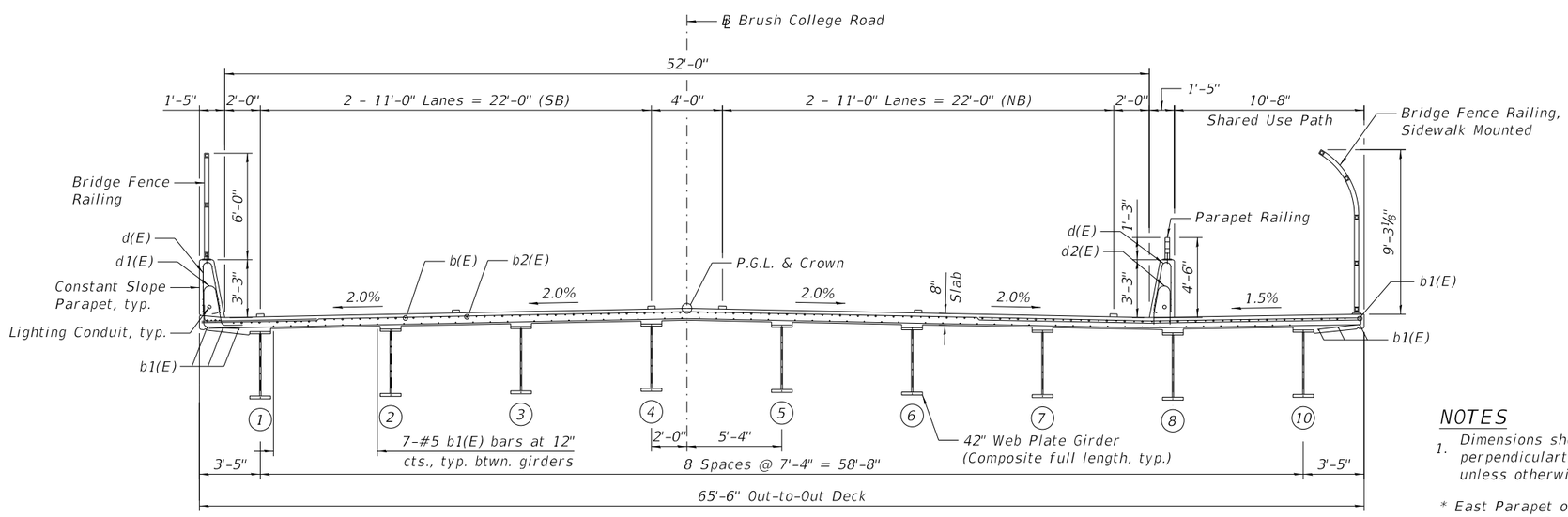

CROSS SECTION

(Looking North)
Sta. 61+28.19 to Sta. 62+46.19

NOTES

1. Dimensions shown are measured perpendicularto Local Tangent unless otherwise noted.

* East Parapet overhang varies 2'-6" to 3'-5⅝" measured at Rt. ∠'s to ℄ Brush College Road

** Dimensions measured @ Rt. ∠'s to ℄ Brush College Road

AECOM	USER NAME = elif.ulger	DESIGNED - IIP	REVISED -	STATE OF ILLINOIS DEPARTMENT OF TRANSPORTATION	SUPERSTRUCTURE DETAILS I STRUCTURE NO. 058-9202	F.A.U. RTE.	SECTION	COUNTY	TOTAL SHEETS / SHEET NO.
		CHECKED -	REVISED -			7448	09-00933-01-BR	MACON	572 / 390
	PLOT SCALE = N.T.S.	DRAWN - IIP	REVISED -					CONTRACT NO. XXXX(XXX)	
	PLOT DATE = 6/19/2020	CHECKED -	REVISED -				ILLINOIS	FED. AID PROJECT	

MODEL: Sheet
FILE NAME: pw:\\aecom-na-pw.bentley.com:AECOM_DS16_NA\Documents\60603202-Brush College\900-CAD GIS\910_CAD\03_SHEETS\01_AECOM\Structural\60603202_S-10_Superstructure-Details_I.dgn

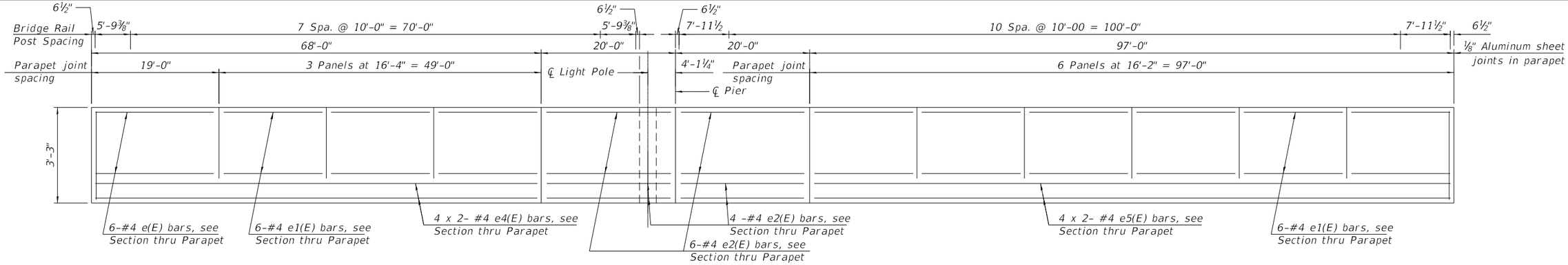

INSIDE ELEVATION OF WEST PARAPET

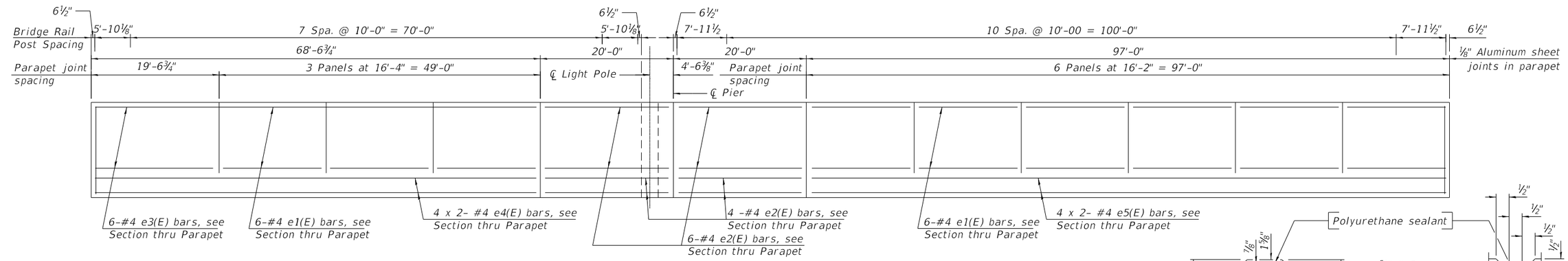

INSIDE ELEVATION OF EAST PARAPET

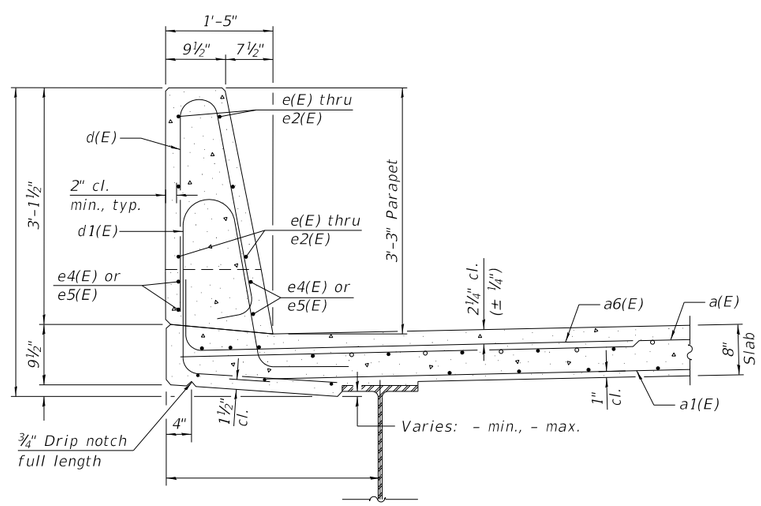

SECTION THRU WEST PARAPET

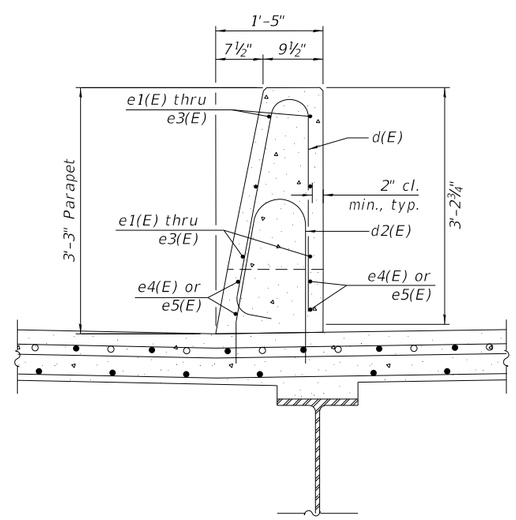

SECTION THRU EAST PARAPET

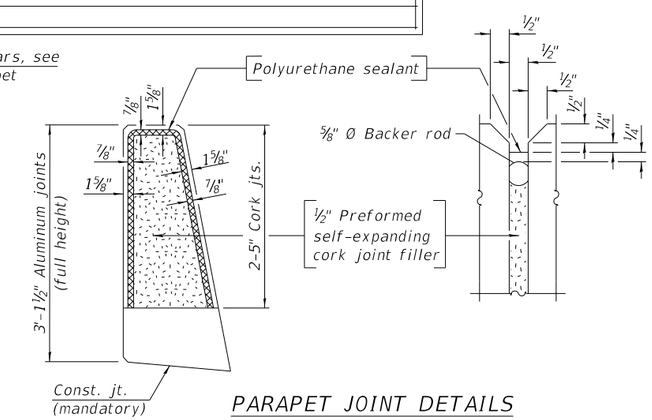

PARAPET JOINT DETAILS

Notes:

Fiberglass pipe shall conform to ASTM D2996, with short-time rupture strength hoop tensile stress of 30,000 p.s.i. minimum.

The exterior surfaces of the floor drains shall be painted according to Article 506 with the finish coat as specified. The exterior surfaces of the drains shall be cleaned according to the Society of Protective Coating's Spec. SSPC-SP1 prior to painting.

The top portion of aluminum floor drains shall be coated to minimize reaction with wet concrete.

The clamping device shall be galvanized according to AASHTO M 232. Cost of clamping device included with Floor Drains.

The ⅛" aluminum sheet shall be ASTM B 209 alloy 3003-H14 and coated to minimize reaction with wet concrete. Cost included with Concrete Superstructure.

The polyurethane sealant shall be according to Article 1050.04 of the Std. Spec. and the color shall be gray.

Headed bars shall conform to ASTM A970 with threaded attachment; Class HA; and reinforcement bars conforming to ASTM A706. Cost included with Reinforcement Bars, Epoxy Coated.

AECOM

USER NAME = elif.ulger	DESIGNED - IIP	REVISED -	
	CHECKED -	REVISED -	
PLOT SCALE = N.T.S.	DRAWN - IIP	REVISED -	
PLOT DATE = 6/19/2020	CHECKED -	REVISED -	

4'-6⅜"

STATE OF ILLINOIS
DEPARTMENT OF TRANSPORTATION

SUPERSTRUCTURE DETAILS II
STRUCTURE NO. 058-9202

F.A.U. RTE.	SECTION	COUNTY	TOTAL SHEETS	SHEET NO.
7448	09-00933-01-BR	MACON	572	391
		CONTRACT NO. XXXX(XXX)		
		ILLINOIS FED. AID PROJECT		

MODEL: Sheet
FILE NAME: pw:\\aecom-na-pw.bentley.com:AECOM_DS16_NA\Documents\60603202-Brush College\900-CAD GIS\910_CAD\03_SHEETS\01_AECOM\Structural\60603202_S-11_Superstructure-Details_II

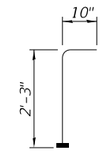

BAR v100(E)
(Headed)

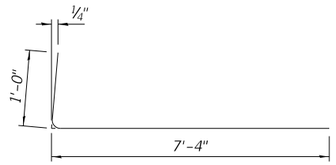

BAR a6(E)

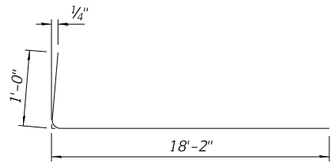

BAR a7(E)

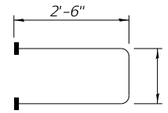

BAR s10(E)
(Headed)

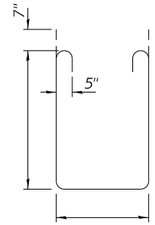

BAR s11(E)

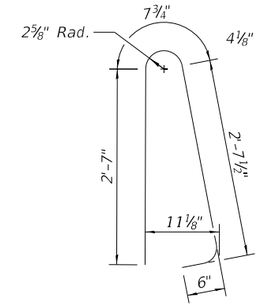

BAR d(E)

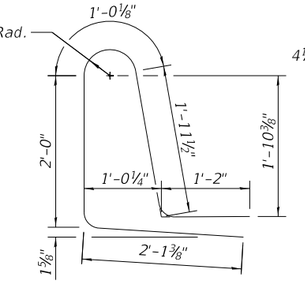

BAR d1(E)

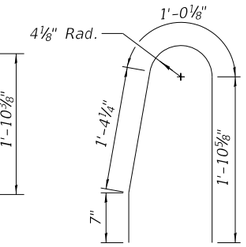

BAR d2(E)

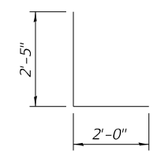

BAR d3(E)

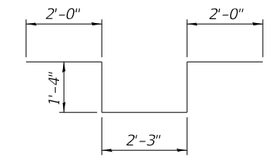

BAR d4(E)

SUPERSTRUCTURE BILL OF MATERIAL

Bar	No.	Size	Length	Shape
a(E)	444	#5	39'-4"	
a1(E)	189	#5	39'-3"	
a2(E)	255	#5	29'-8"	
a3(E)	307	#5	32'-0"	
a4(E)	130	#5	46'-7"	
a5(E)	177	#5	37'-0"	
a6(E)	408	#6	8'-4"	
a7(E)	408	#6	19'-2"	
b(E)	434	#5	31'-10"	
b1(E)	420	#5	31'-10"	
b2(E)	183	#5	32'-6"	
b3(E)	8	#5	36'-3"	
b4(E)	6	#5	28'-6"	
b5(E)	6	#5	39'-8"	
b6(E)	2	#5	32'-6"	
b7(E)	1	#5	29'-7"	
b8(E)	4	#5	22'-8"	
b9(E)	10	#5	22'-10"	
b10(E)	4	#5	22'-10"	
d(E)	442	#5	6'-5"	
d1(E)	220	#5	8'-3"	
d2(E)	222	#5	4'-10"	
d3(E)	6	#6	4'-5"	
d4(E)	12	#6	8'-11"	
e(E)	6	#4	18'-8"	
e1(E)	108	#4	15'-10"	
e2(E)	40	#4	19'-8"	
e3(E)	6	#4	19'-2"	
e4(E)	16	#4	35'-4"	
e5(E)	16	#4	49'-7"	
m10(E)		#6		
m11(E)		#6		
m12(E)		#6		
m13(E)		#5	4'-0"	
s10(E)		#5		
s11(E)		#5		
v100(E)		#5	3'-1"	
Reinforcement Bars, Epoxy Coated			Lbs.	
Concrete Superstructure			Cu. Yds.	

Bars indicated thus 1 x 2-#4 etc. indicates 1 line of bars with 2 lengths per line.

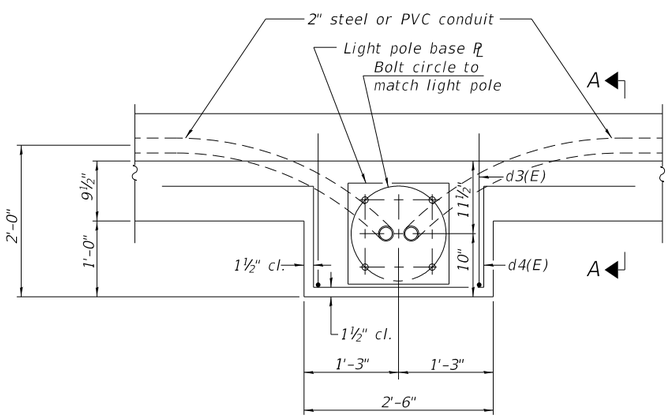

PLAN

Note:
Cost of anchor rods and conduit is included with Concrete Superstructure.

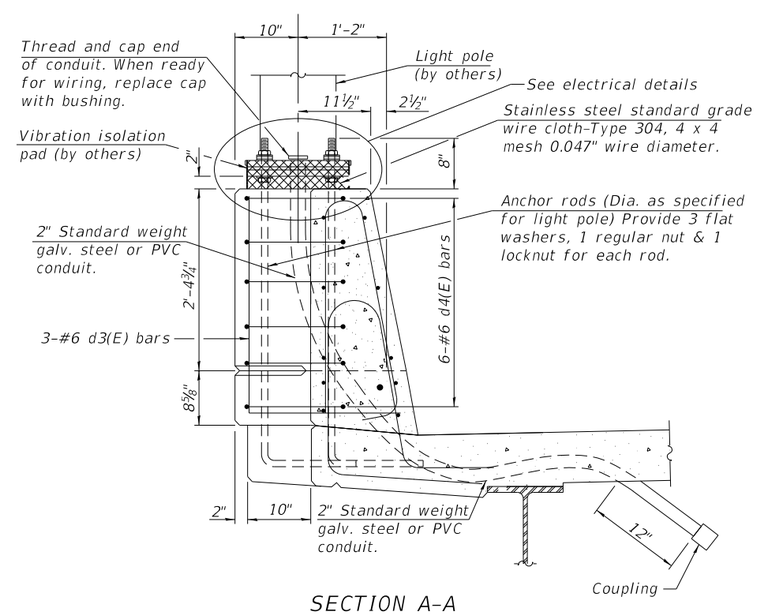

SECTION A-A

MODEL: Sheet
FILE NAME: pw:\\aecom-na-pw.bentley.com:AECOM_DS16_NA\Documents\60603202-Brush College\900-CAD GIS\910_CAD\03_SHEETS\01_AECOM\Structural\60603202_S-12_Superstructure-Details_III.dgn

AECOM	USER NAME = elif.ulger	DESIGNED - IIP	REVISED -	STATE OF ILLINOIS DEPARTMENT OF TRANSPORTATION	SUPERSTRUCTURE DETAILS III STRUCTURE NO. 058-9202
		CHECKED -	REVISED -		
	PLOT SCALE = N.T.S.	DRAWN - IIP	REVISED -		
	PLOT DATE = 6/19/2020	CHECKED -	REVISED -		

F.A.U. RTE.	SECTION	COUNTY	TOTAL SHEETS	SHEET NO.
7448	09-00933-01-BR	MACON	572	392
		CONTRACT NO. XXXX(XXX)		
	ILLINOIS	FED. AID PROJECT		

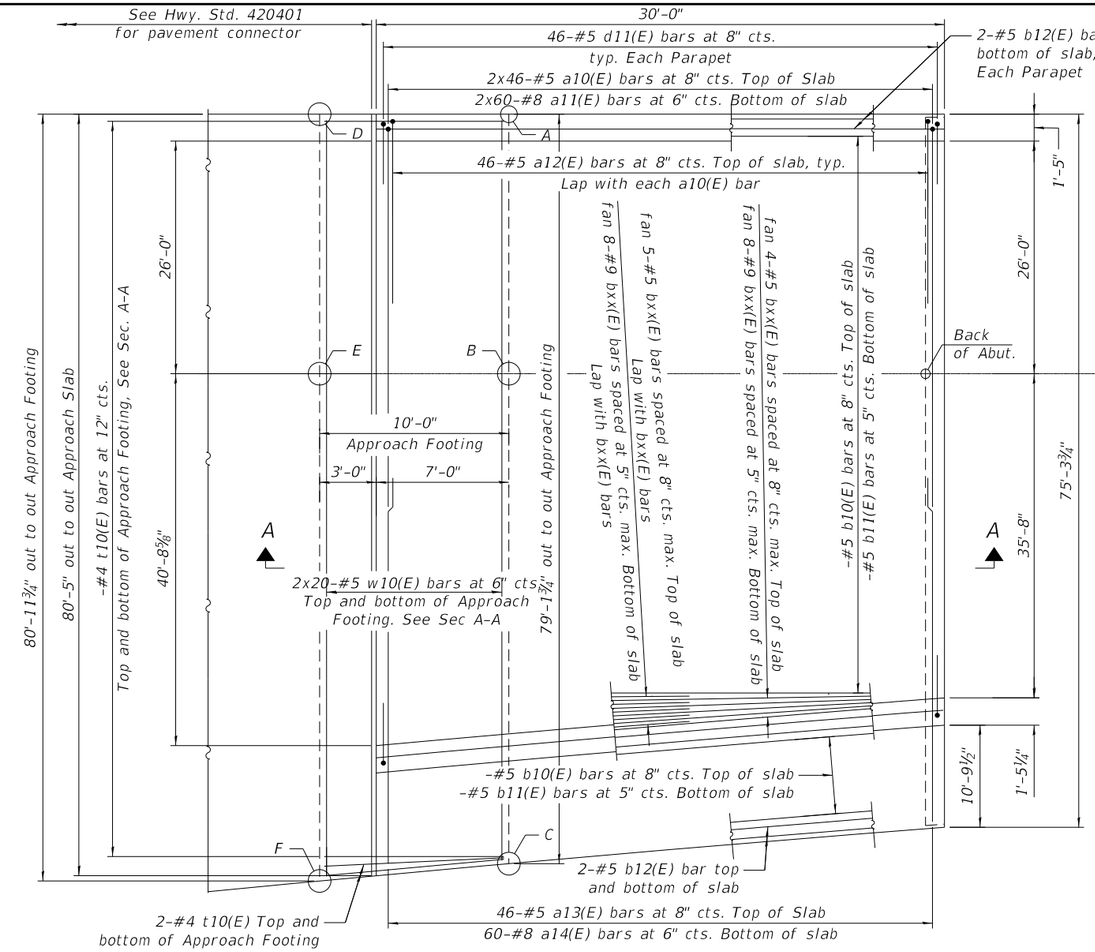

South Approach Slab Plan

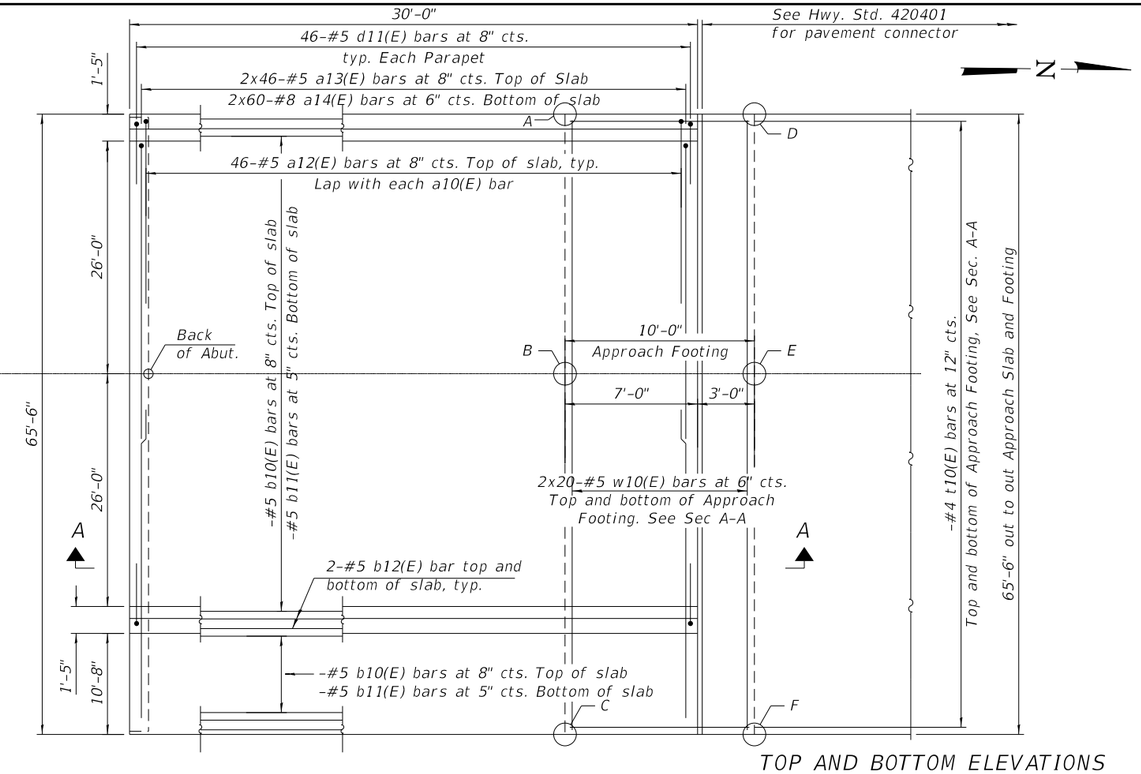

North Apprioach Slan Plan

TOP AND BOTTOM ELEVATIONS FOR APPROACH FOOTING

Point	Approach Top	Approach Bottom	Approach Top	Approach Bottom
A				
B				
C				
D				
E				
F				

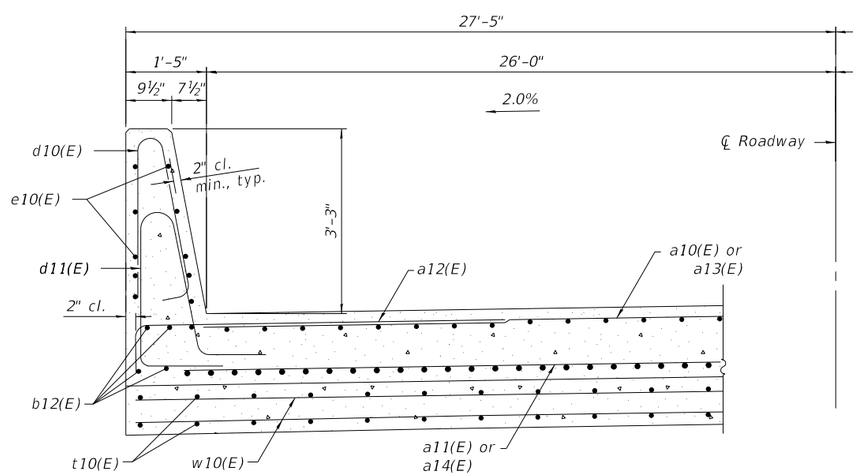

AT APPROACH FOOTING

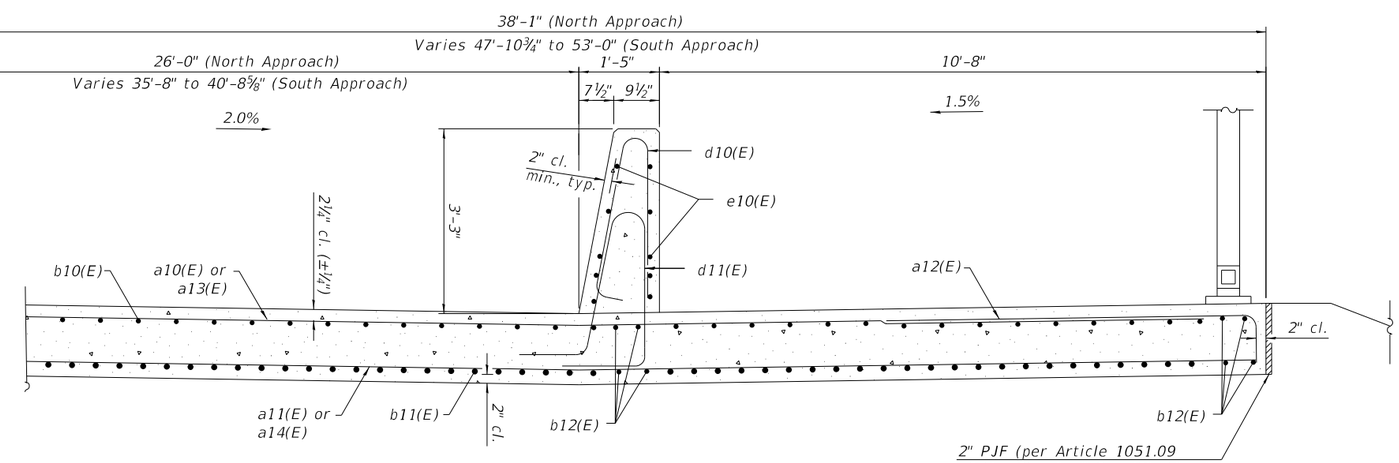

NEAR ABUTMENT

2" PJF (per Article 1051.09
of the Standard Specifications)
bonded to wingwall with suitable
adhesive as recommended by supplier.

CROSS SECTION
(Looking North)

MODEL: Sheet
FILE NAME: pw:\\aecom-na-pw.bentley.com:AECOM_DS16_NA\Documents\60603202-Brush College\900-CAD GIS\910_CAD\03_SHEETS\01_AECOM\Structural\60603202_S-15_Approach-Details_I

AECOM

USER NAME = elif.ulger	DESIGNED - IIP	REVISED -	
	CHECKED -	REVISED -	
PLOT SCALE = N.T.S.	DRAWN - IIP	REVISED -	
PLOT DATE = 6/19/2020	CHECKED -	REVISED -	

STATE OF ILLINOIS
DEPARTMENT OF TRANSPORTATION

BRIDGE APPROACH SLAB DETAILS I
STRUCTURE NO. 058-9202

F.A.U. RTE.	SECTION	COUNTY	TOTAL SHEETS	SHEET NO.
7448	09-00933-01-BR	MACON	572	393
		CONTRACT NO. XXXX(XXX)		
		ILLINOIS	FED. AID PROJECT	

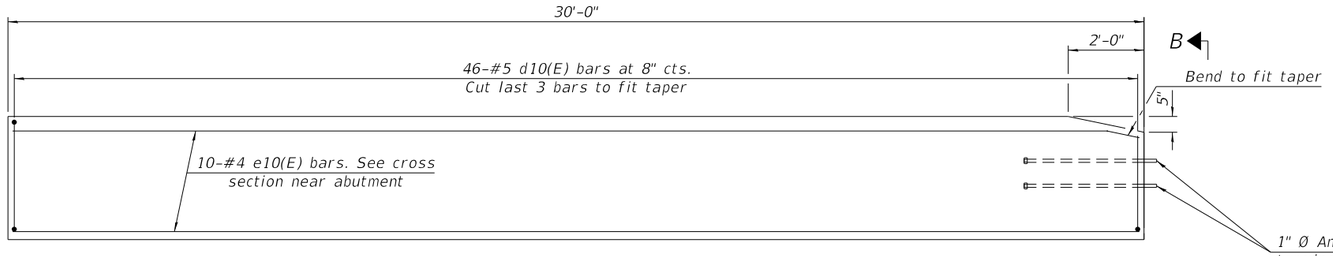

INSIDE ELEVATION OF PARAPET AND CURB

Notes:

The joint opening shall be adjusted for temperature per Article 520.04 of the Standard Specifications. However, since this detail is for jointless structures, the length of bridge used to calculate the adjustment shall be equal to half the total bridge length plus the length of the bridge approach slab.

Parapet concrete shall be paid for as Concrete Superstructure.

Approach slab shall be paid for as Concrete Superstructure (Approach Slab).

Approach footing concrete shall be paid for as Concrete Structures.

The approach footing maximum applied service bearing pressure (Qmax) = 2.0 ksf.

Cost of excavation for approach footing included with Concrete Structures.

For Granular Backfill for Structures and drainage treatment details, see sheet of .

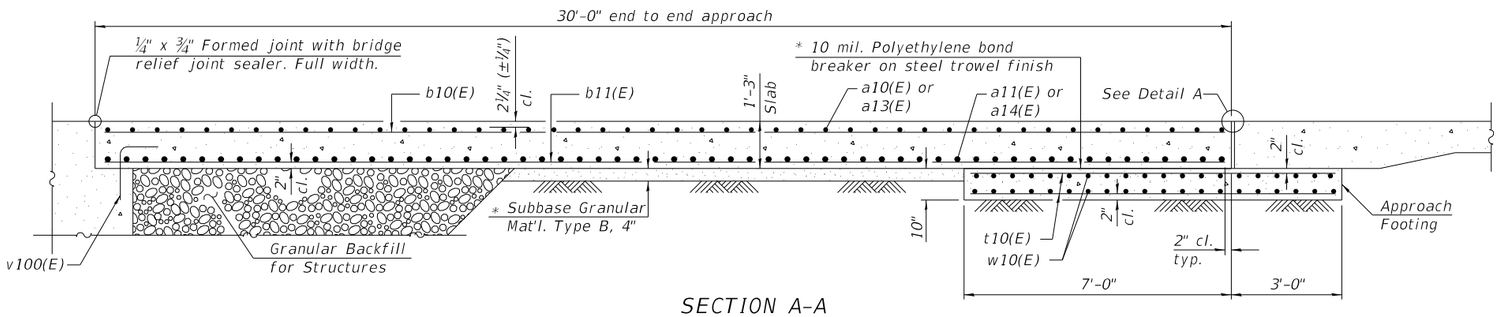

SECTION A-A

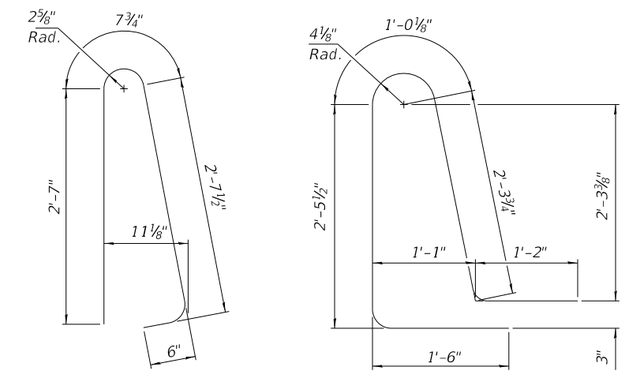

BAR d10(E)

BAR d11(E)

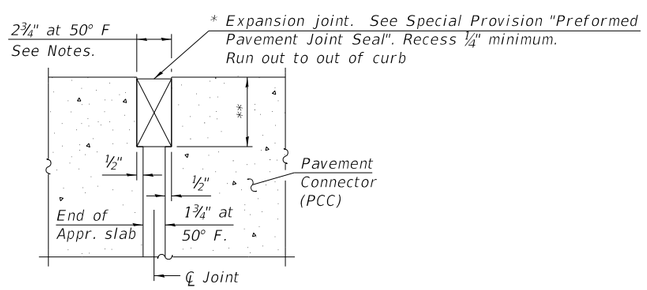

DETAIL A

* Cost included with Concrete Superstructure (Approach Slab).

** Per manufacturer recommendations

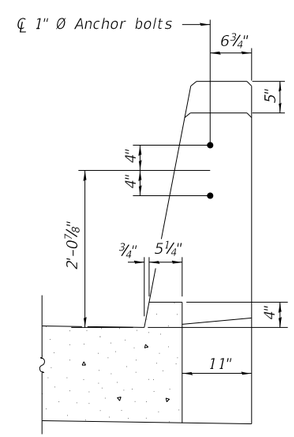

VIEW B-B

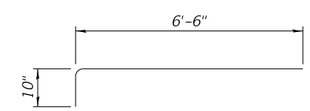

BAR a12(E)

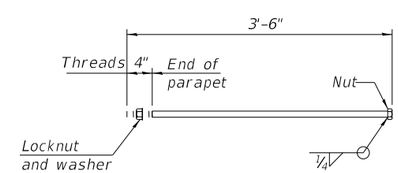

*1" Ø ANCHOR BOLT

(Anchor bolt assemblies shall be galvanized according to Article 1006.09 of the Standard Specifications)

TWO APPROACHES
BILL OF MATERIAL

Bar	No.	Size	Length	Shape
a10(E)	92	#5		
a11(E)	120	#8		
a12(E)	92	#5	7'-4"	
b10(E)		#5	29'-8"	
b11(E)		#9	29'-8"	
b12(E)	16	#5	14'-8"	
b13(E)	4	#4	14'-8"	
d10(E)	92	#5	6'-5"	
d11(E)	92	#5	8'-6"	
e10(E)	40	#4	14'-8"	
t10(E)		#4	9'-8"	
w10(E)	80	#5		
Concrete Superstructure			Cu. Yd.	
Concrete Superstructure (Approach Slab)			Cu. Yd.	
Concrete Structures			Cu. Yd.	
Reinforcement Bars, Epoxy Coated			Pound	

(Sheet 2 of 2)

MODEL: Sheet
FILE NAME: pw:\\aecom-na-pw.bentley.com:AECOM_DS16_NA\Documents\60603202-Brush College\900-CAD GIS\910_CAD\03_SHEETS\01_AECOM\Structural\60603202_S-16_Approach-Details_II

AECOM

USER NAME = elif.ulger	DESIGNED - IIP	REVISED -	
	CHECKED -	REVISED -	
PLOT SCALE = N.T.S.	DRAWN - IIP	REVISED -	
PLOT DATE = 6/19/2020	CHECKED -	REVISED -	

STATE OF ILLINOIS
DEPARTMENT OF TRANSPORTATION

BRIDGE APPROACH SLAB DETAILS II
STRUCTURE NO. 058-9202

F.A.U. RTE.	SECTION	COUNTY	TOTAL SHEETS	SHEET NO.
7448	09-00933-01-BR	MACON	572	394
		CONTRACT NO. XXXX(XXX)		
	ILLINOIS	FED. AID PROJECT		

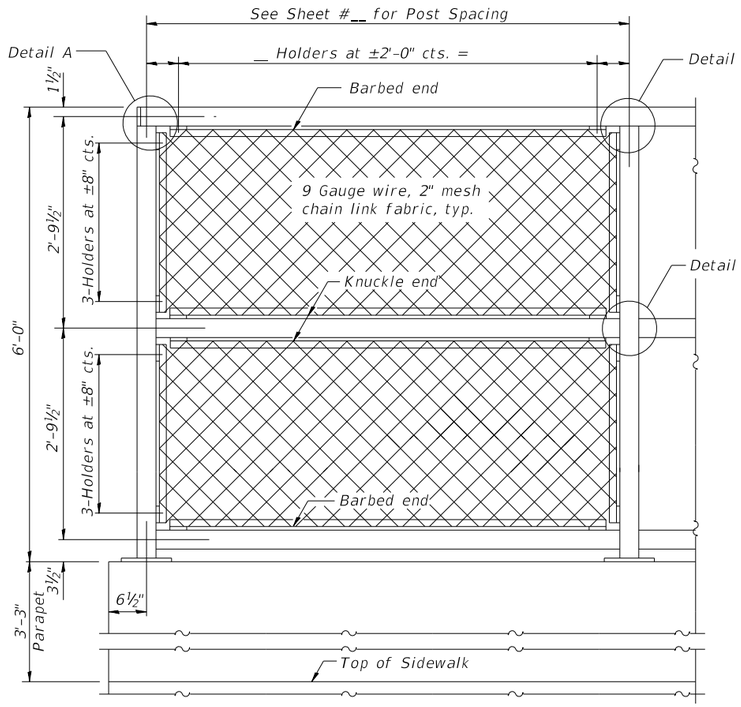

ELEVATION
(Inside Face)

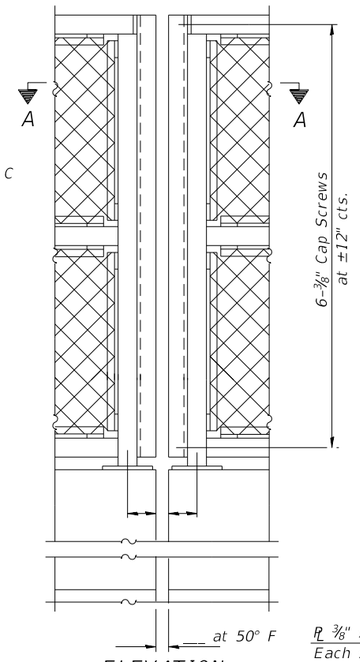

ELEVATION
(At Expansion Joint)

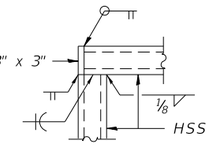

DETAIL A

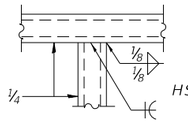

DETAIL B

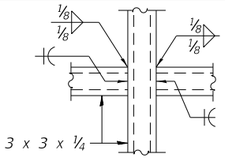

DETAIL C

The designer should add the appropriate note as applicable.
A. When railing is galvanized:
All steel rail elements shall be galvanized according to Article 509.05 of the Standard Specifications.
B. When railing is painted:
All post, railing, splices, anchor devices, and bent plates shall be painted using the (List the appropriate paint system for Structural Steel).

Only one of the above notes would appear on Contract Plans.

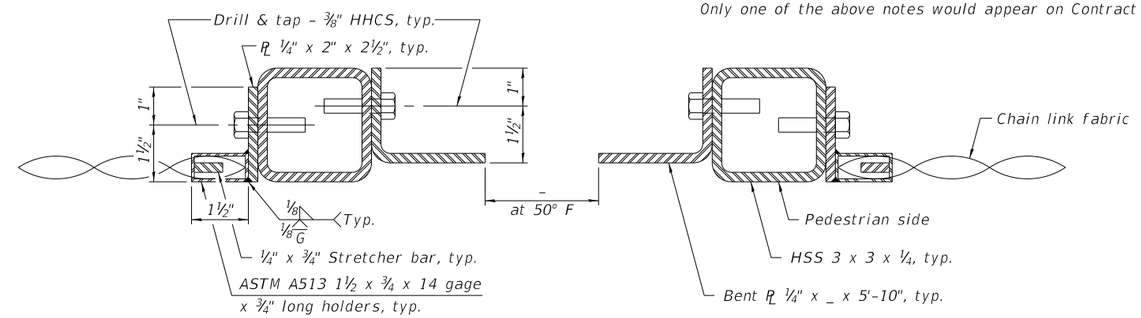

SECTION A-A

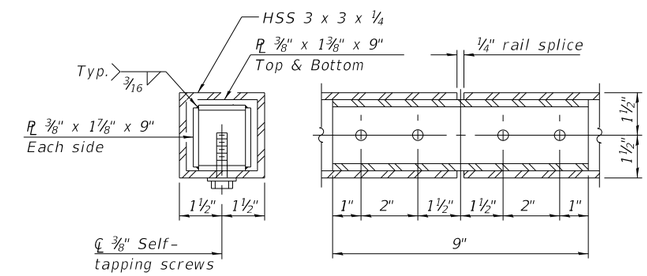

RAIL SPLICE

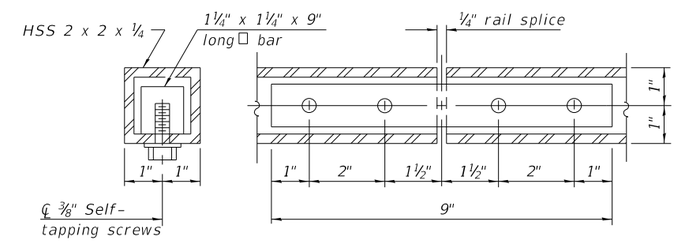

HANDRAIL SPLICE

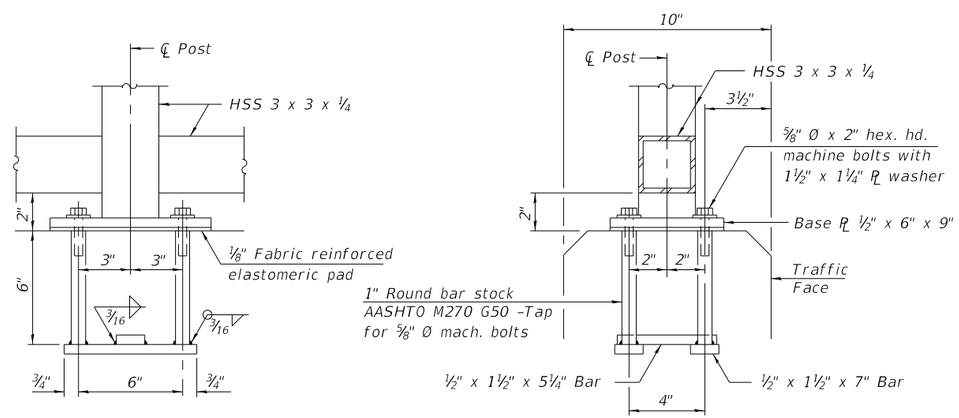

ANCHOR BOLT DETAILS

In lieu of the cast-in-place anchor device shown, the Contractor has the option of drilling and setting ⅝" Ø anchor rods according to Article 509.06 of the Standard Specifications. Embedment shall be according to the manufacturer's specifications.

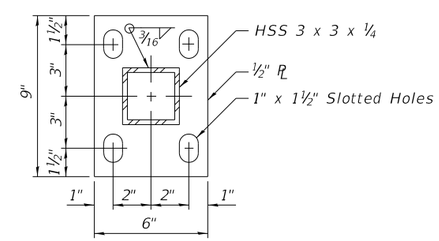

BASE PL

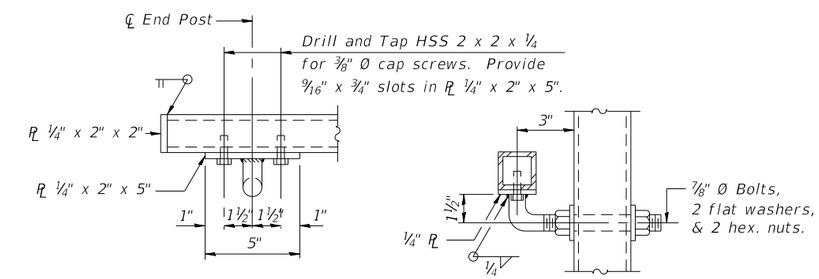

HANDRAIL DETAIL

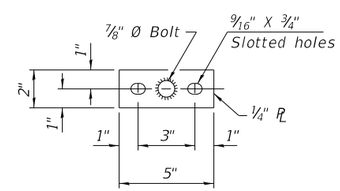

BASE PL
(Handrail)

Note:
CVN testing may be omitted for the railing.

BILL OF MATERIAL

Item	Unit	Quantity
Bridge Fence Railing	Foot	

R-28 2-17-2017 (10'-0" Maximum Post Spacing)

AECOM

USER NAME = elif.ulger	DESIGNED -	REVISED -
	CHECKED -	REVISED -
PLOT SCALE = N.T.S.	DRAWN -	REVISED -
PLOT DATE = 6/19/2020	CHECKED -	REVISED -

STATE OF ILLINOIS
DEPARTMENT OF TRANSPORTATION

BRIDGE FENCE RAILING, PARAPET MOUNTED
STRUCTURE NO. 058-9202

F.A.U. RTE.	SECTION	COUNTY	TOTAL SHEETS	SHEET NO.
7448	09-00933-01-BR	MACON	572	395
		CONTRACT NO. XXXX(XXX)		
		ILLINOIS FED. AID PROJECT		

MODEL: Sheet
FILE NAME: pw:\\aecom-na-pw.bentley.com:AECOM_DS16_NA\Documents\60603202-Brush College\900-CAD GIS\910_CAD\03_SHEETS\01_AECOM\Structural\60603202_S-17_Railing-Parapet-Mounted.dgn

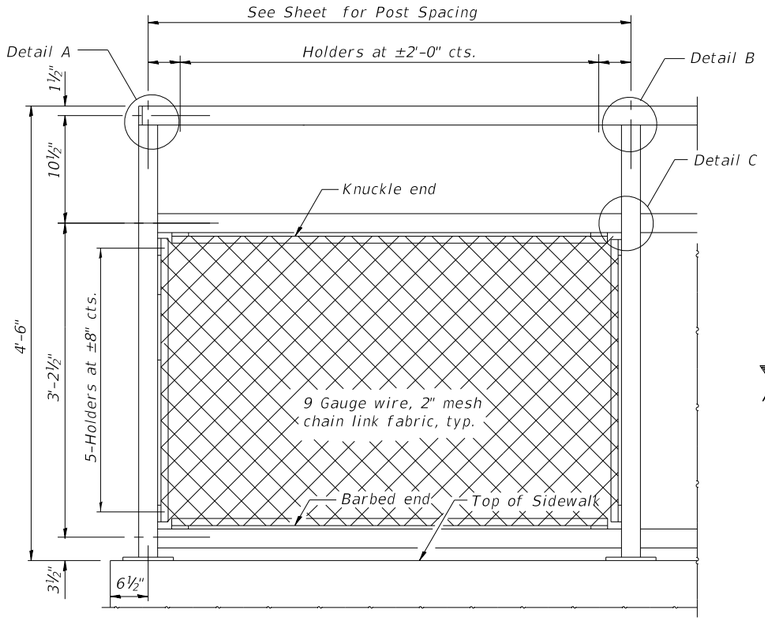

BICYCLE RAILING

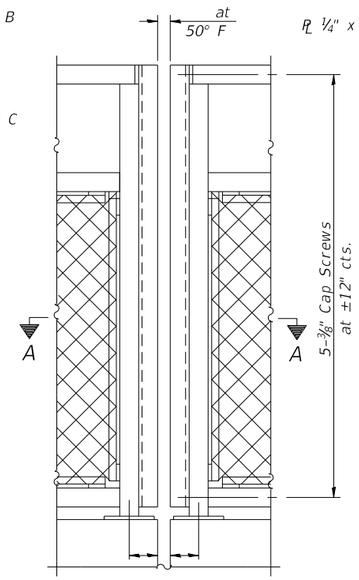

BICYCLE RAILING

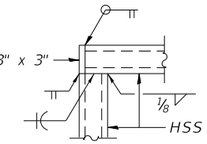

DETAIL A

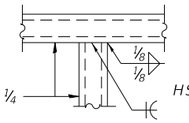

DETAIL B

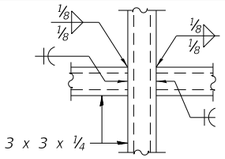

DETAIL C

The designer should add the appropriate note as applicable.
A. When railing is galvanized:
All steel rail elements shall be galvanized according to Article 509.05 of the Standard Specifications.
B. When railing is painted:
All post, railing, splices, anchor devices, and plates shall be painted using the (List the appropriate paint system for Structural Steel).

Only one of the above notes would appear on Contract Plans.

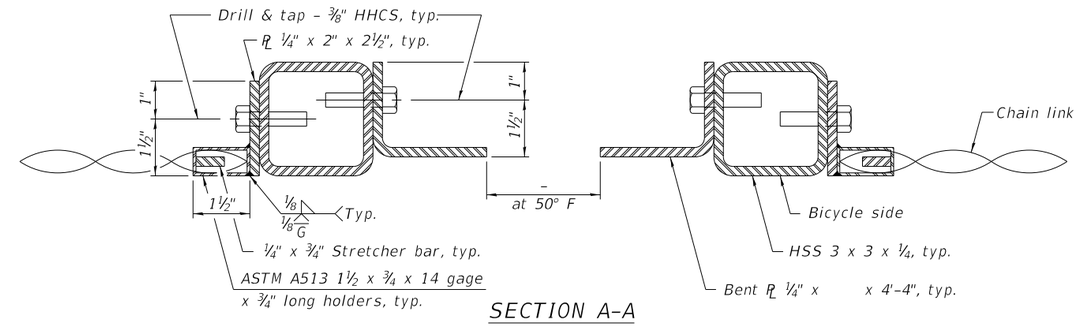

SECTION A-A

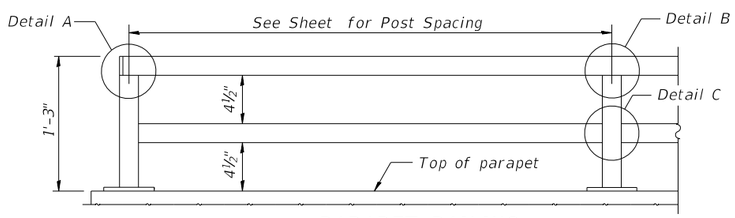

PARAPET RAILING
ELEVATION
(Inside Face of Two Element Rail)

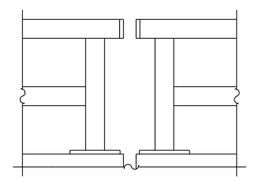

PARAPET RAILING
ELEVATION AT EXPANSION JOINT
(Two Element Rail Shown - Three Element Rail Similar)

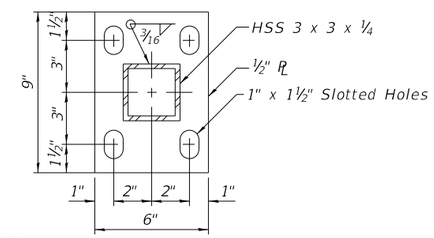

BASE PL

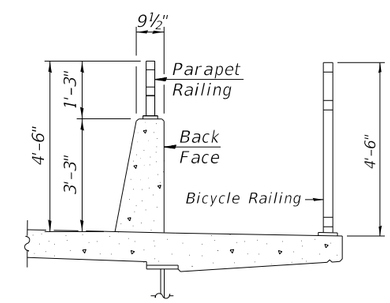

SECTION THRU DECK

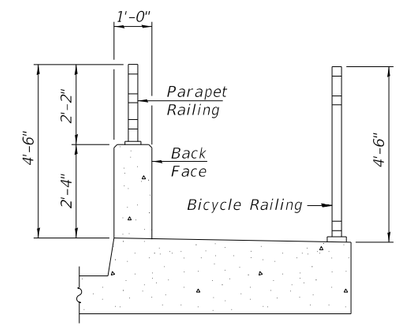

SECTION THRU SIDEWALK

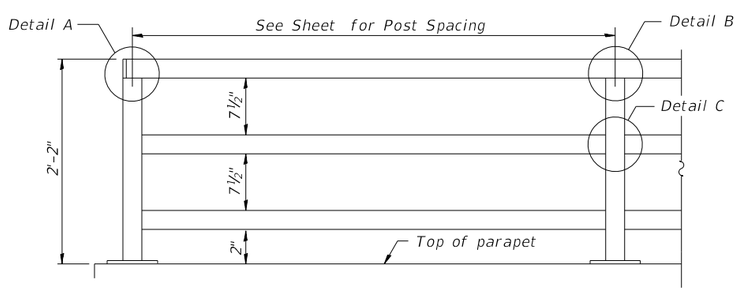

PARAPET RAILING
ELEVATION
(Inside Face of Three Element Rail)

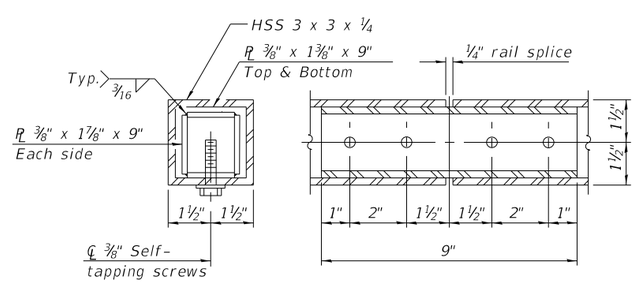

RAIL SPLICE

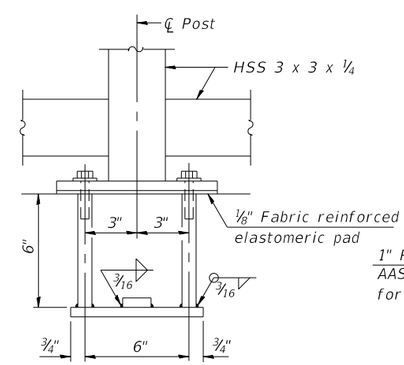

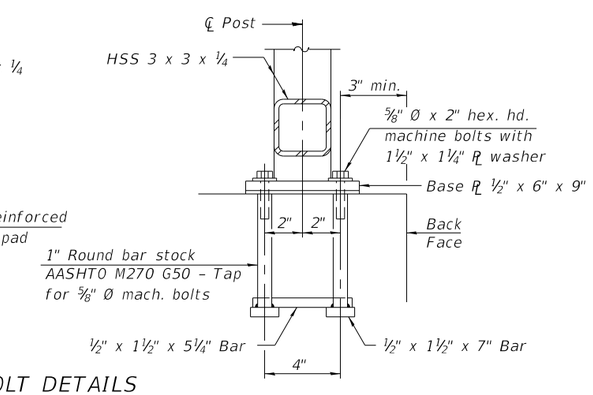

ANCHOR BOLT DETAILS

In lieu of the cast-in-place anchor device shown, the Contractor has the option of drilling and setting ⅝" Ø anchor rods according to Article 509.06 of the Standard Specifications. Embedment shall be according to the manufacturer's specifications.

BILL OF MATERIAL

Item	Unit	Quantity
Bicycle Railing	Foot	
Parapet Railing	Foot	

Notes:
All structural steel tubing, post and railing, for parapet railing shall be CVN tested according to 1006.34(b) of the Standard Specifications.
CVN testing may be omitted for the Bicycle Railing.

R-29 1-14-2019 (10'-0" Maximum Post Spacing)

MODEL: Sheet
FILE NAME: pw:\\aecom-na-pw.bentley.com:AECOM_DS16_NA\Documents\60603202-Brush College\900-CAD GIS\910_CAD\03_SHEETS\01_AECOM\Structural\60603202_5-18_Bicycle-Railing.dgn

AECOM

USER NAME = elif.ulger	DESIGNED -	REVISED -	
	CHECKED -	REVISED -	
PLOT SCALE = N.T.S.	DRAWN -	REVISED -	
PLOT DATE = 6/19/2020	CHECKED -	REVISED -	

STATE OF ILLINOIS
DEPARTMENT OF TRANSPORTATION

BICYCLE RAILING
STRUCTURE NO. 058-9202

F.A.U. RTE.	SECTION	COUNTY	TOTAL SHEETS	SHEET NO.
7448	09-00933-01-BR	MACON	572	396

CONTRACT NO. XXXX(XXX)
ILLINOIS FED. AID PROJECT

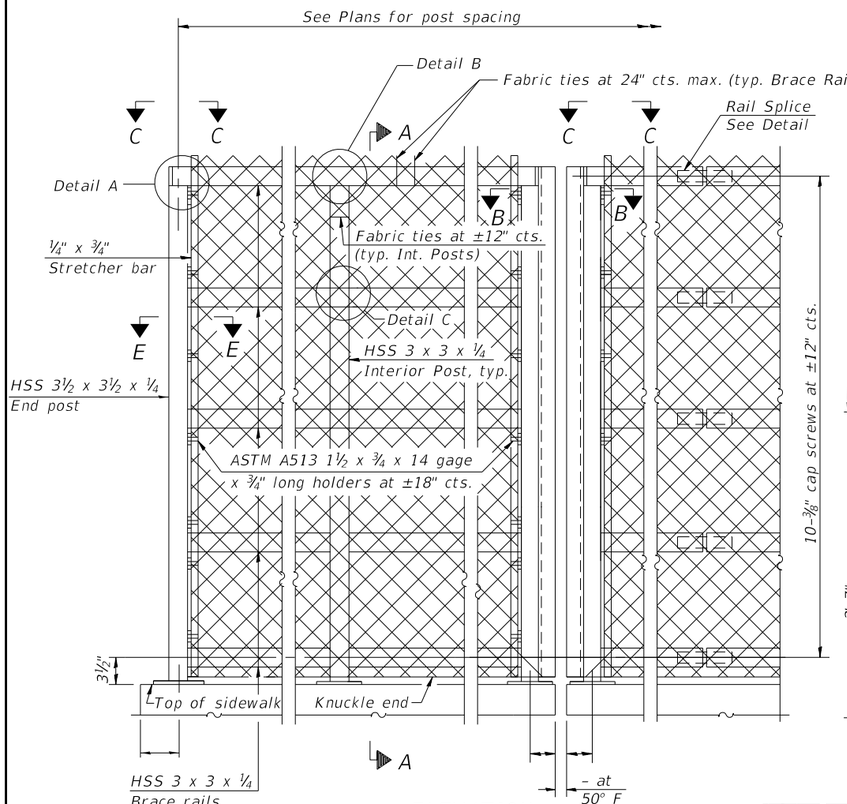

ELEVATION
(Inside Face)

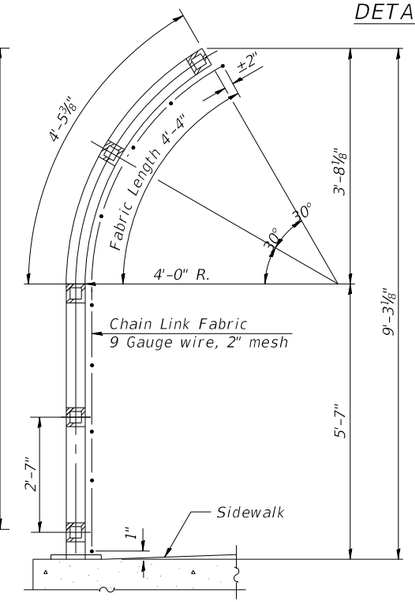

SECTION A-A

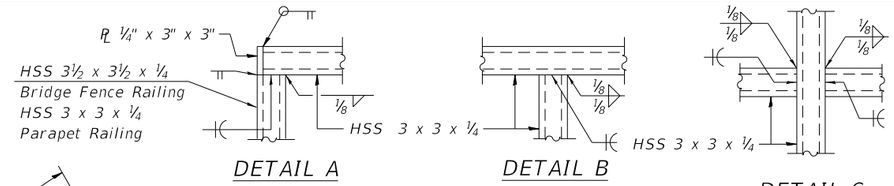

DETAIL A DETAIL B DETAIL C

The designer should add the appropriate note as applicable.
A. When railing is galvanized:
All steel rail elements shall be galvanized according to Article 509.05 of the Standard Specifications.
B. When railing is painted:
All post, railing, splices, anchor devices, and plates shall be painted using the (List the appropriate paint system for Structural Steel).

Only one of the above notes would appear on Contract Plans.

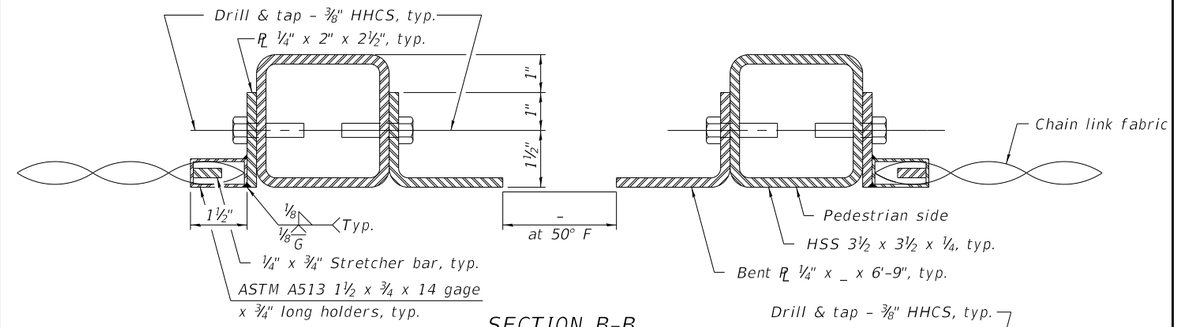

SECTION B-B
(At Expansion Joint)

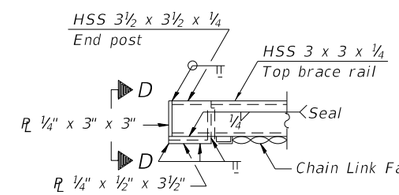

VIEW C-C

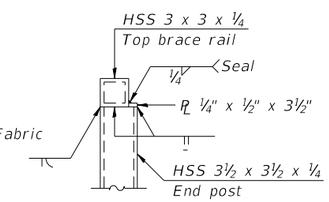

VIEW D-D

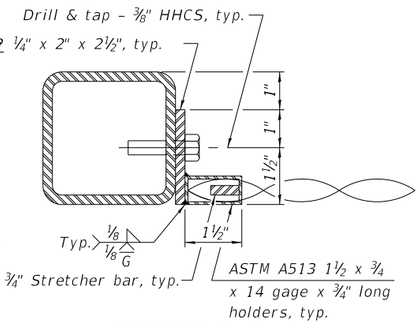

SECTION E-E

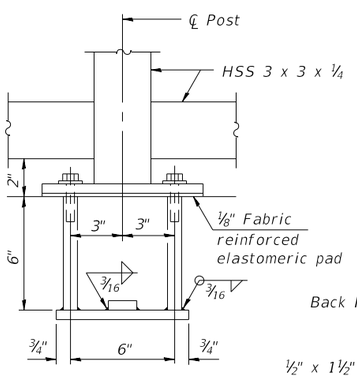

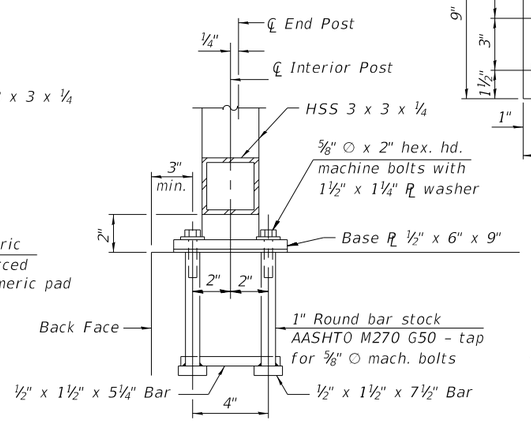

ANCHOR BOLT DETAILS

In lieu of the cast-in-place anchor device shown, the Contractor has the option of drilling and setting ⅝" ∅ anchor rods according to Article 509.06 of the Standard Specifications. Embedment shall be according to the manufacturer's specifications.

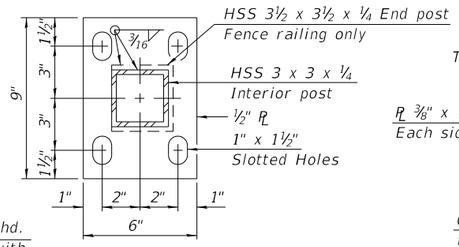

BASE PL

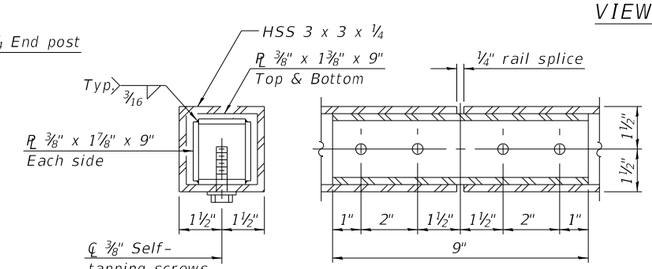

RAIL SPLICE

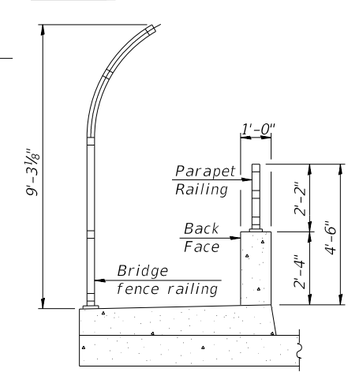

SECTION THRU SIDEWALK

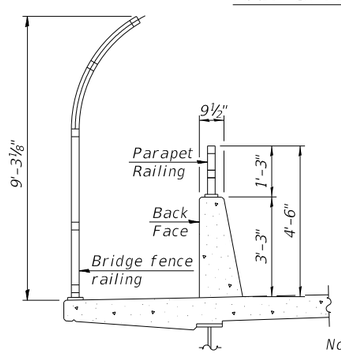

SECTION THRU DECK

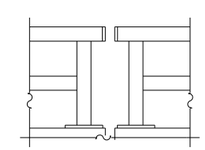

PARAPET RAILING ELEVATION AT EXPANSION JOINT
(Two element rail shown – Three element rail similar)

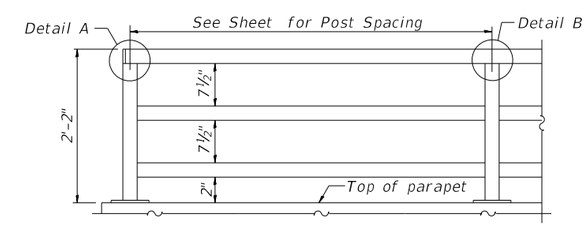

PARAPET RAILING ELEVATION
(Inside Face of Three Element Rail)

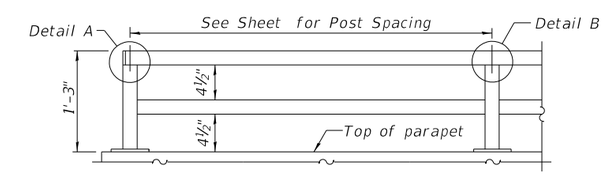

PARAPET RAILING ELEVATION
(Inside face of two element rail)

Notes:
All structural steel tubing, post and railing, for parapet railing shall be CVN tested according to 1006.34(b) of the Standard Specifications.
CVN testing may be omitted for the Bridge Fence Railing.

BILL OF MATERIAL

Item	Unit	Quantity
Bridge Fence Railing (Sidewalk)	Foot	
Parapet Railing	Foot	

R-33 1-14-2019 (10'-0" Maximum Post Spacing)

AECOM

USER NAME = elif.ulger	DESIGNED -	REVISED -	
	CHECKED -	REVISED -	
PLOT SCALE = N.T.S.	DRAWN -	REVISED -	
PLOT DATE = 6/19/2020	CHECKED -	REVISED -	

STATE OF ILLINOIS
DEPARTMENT OF TRANSPORTATION

BRIDGE FENCE RAILING, SIDEWALK MOUNTED
STRUCTURE NO. 058-9202

F.A.U. RTE.	SECTION	COUNTY	TOTAL SHEETS	SHEET NO.
7448	09-00933-01-BR	MACON	572	397

CONTRACT NO. XXXX(XXX)
ILLINOIS FED. AID PROJECT

MODEL: Sheet
FILE NAME: pw:\\aecom-na-pw.bentley.com:AECOM_DS16_NA\Documents\60603202-Brush College\900-CAD GIS\910_CAD\03_SHEETS\01_AECOM\Structural\60603202_S-19_Railing-Sidewalk-Mounted.dgn

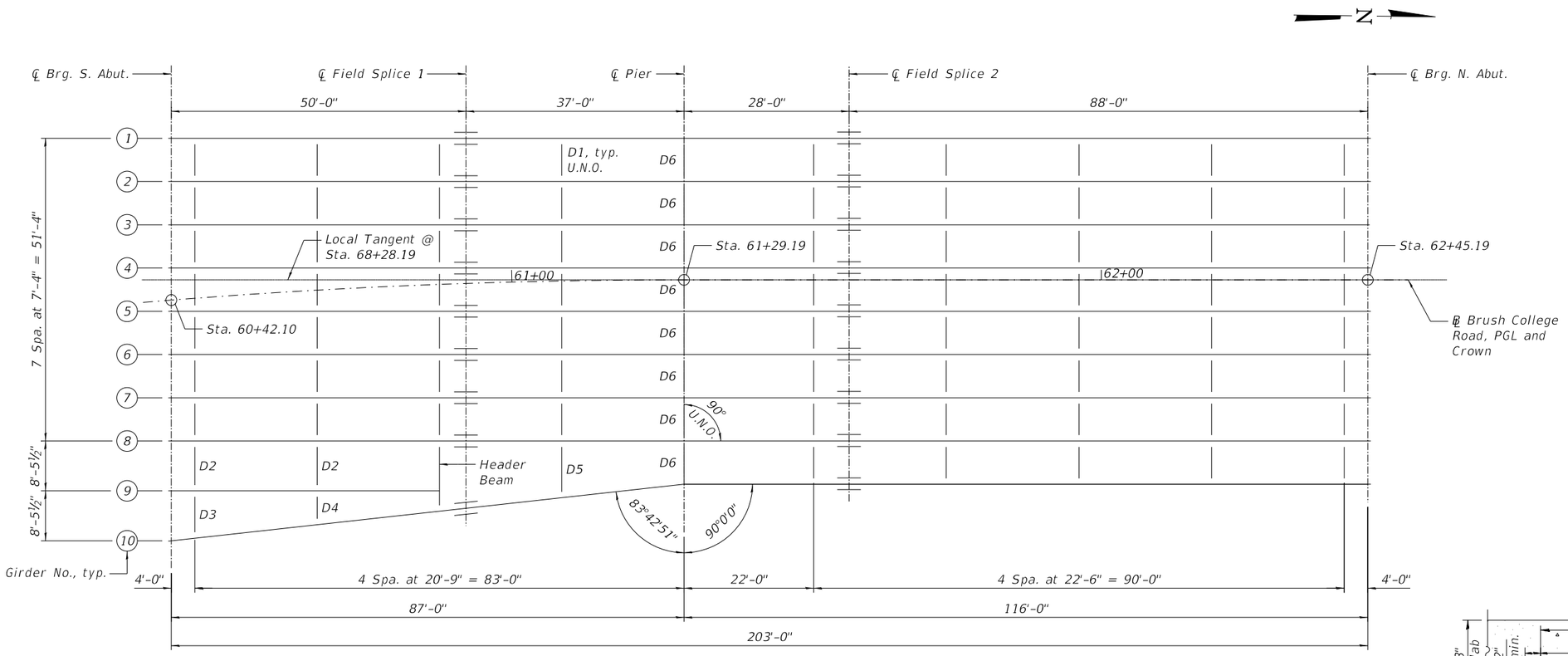

FRAMING PLAN

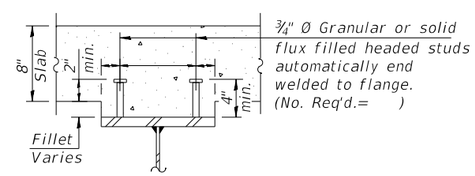

SECTION A-A

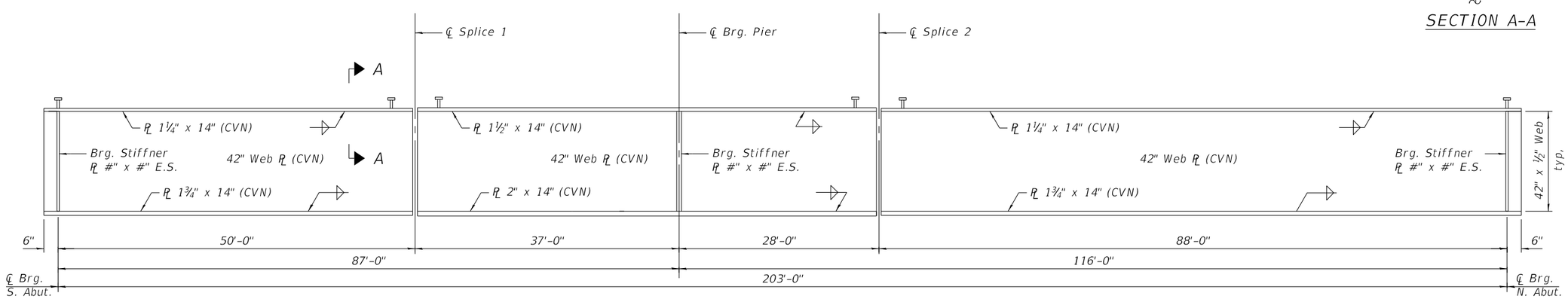

GIRDER ELEVATION - NO. 1 THRU 8

"CVN" denotes Charpy-V-Notch impact
energy requirements, zone 2.

MODEL: Sheet
FILE NAME: pw:\\aecom-na-pw.bentley.com:AECOM_DS16_NA\Documents\60603202-Brush College\900-CAD GIS\910_CAD\03_SHEETS\01_AECOM\Structural\60603202_S-20_Framing-Plan.dgn

AECOM	USER NAME = elif.ulger	DESIGNED - MCC	REVISED -	STATE OF ILLINOIS DEPARTMENT OF TRANSPORTATION	FRAMING PLAN AND GIRDER ELEVATION STRUCTURE NO. 058-9202	F.A.U. RTE.	SECTION	COUNTY	TOTAL SHEETS	SHEET NO.
		CHECKED -	REVISED -			7448	09-00933-01-BR	MACON	572	398
	PLOT SCALE = N.T.S.	DRAWN - MCC	REVISED -					CONTRACT NO. XXXX(XXX)		
	PLOT DATE = 6/19/2020	CHECKED -	REVISED -					ILLINOIS FED. AID PROJECT		

Notes:
Space reinforcement in cap to miss anchor bolts.
Pour steps monolithically with cap.
Bars noted thus, 8x2-#10 etc. indicates 8 lines of bars with 2 lengths per line.
For details of piles, see sheet - of -.
For anchor bolt details see sheet - of -.

PILE DATA

Type:
Nominal Required Bearing:
Factored Resistance Available:
Est. Length:
No. Production Piles:
No. Test Piles:

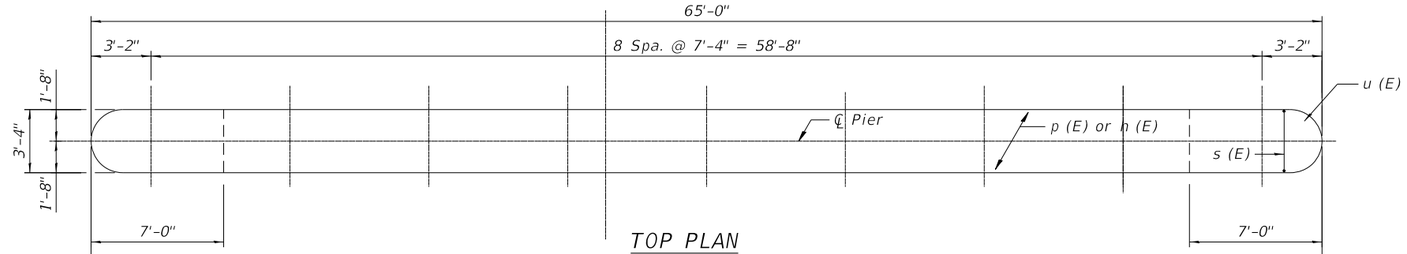

TOP PLAN

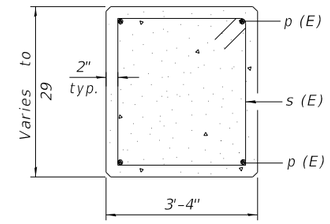

SEC. A-A

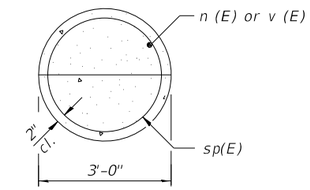

SEC. B-B

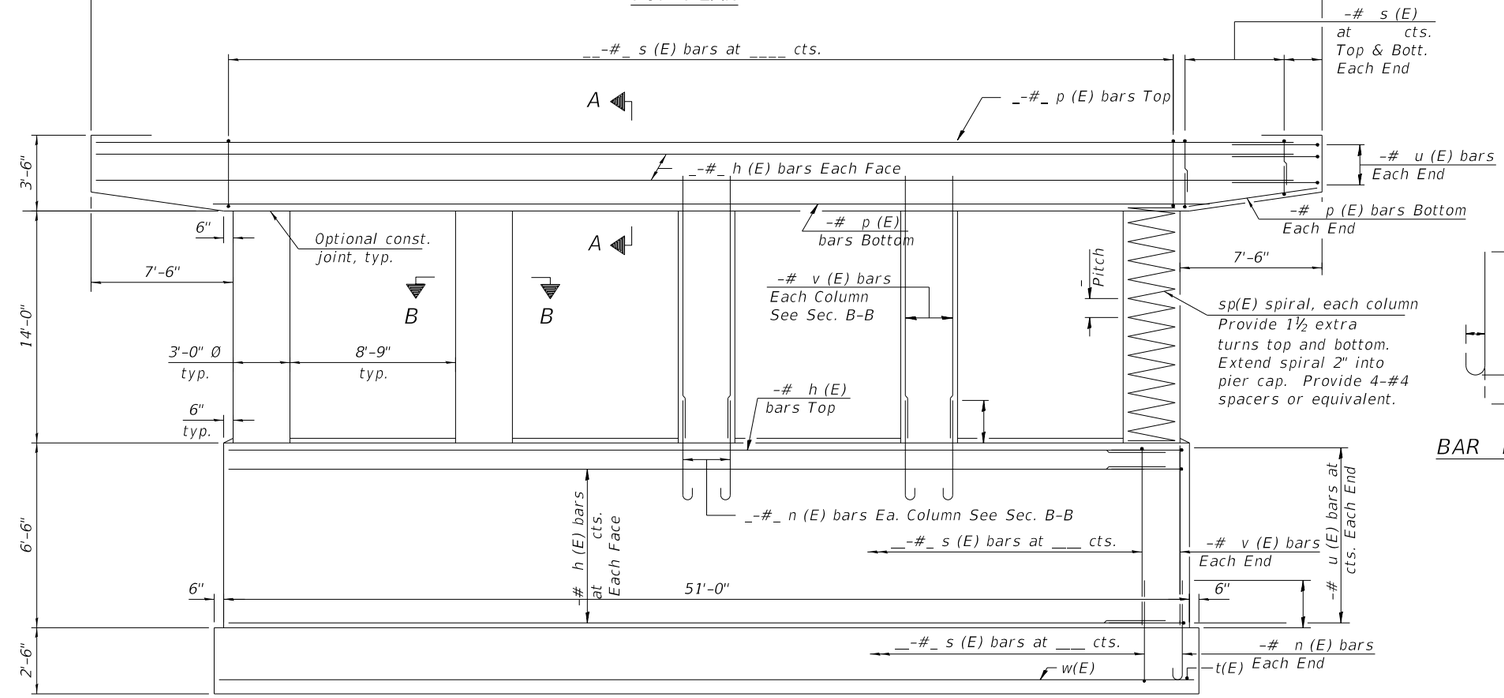

ELEVATION
(Looking North)

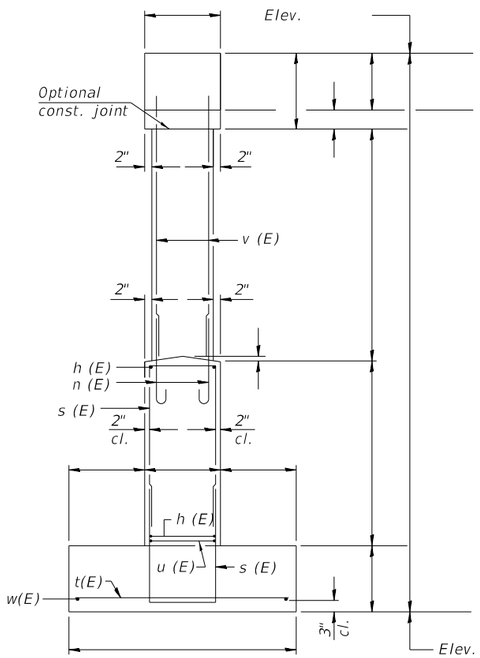

END VIEW

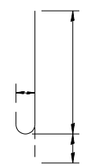

BAR n (E)

BILL OF MATERIAL

Bar	No.	Size	Length	Shape
h (E)		#		
n (E)		#		
p (E)		#		
p (E)		#		
s (E)		#		
s (E)		#		
** sp(E)		#		
t (E)		#		
u (E)		#		
v (E)		#		
w (E)		#		
Structure Excavation			Cu. Yd.	
Concrete Structures			Cu. Yd.	
Reinforcement Bars, Epoxy Coated			Pound	
Furnishing - Piles,			Foot	
Driving Piles			Foot	
Test Pile,			Each	

** Length is height of spiral.

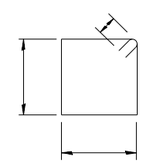

BAR s (E)

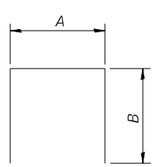

BARS

A & B DIMENSIONS

Bar	A	B

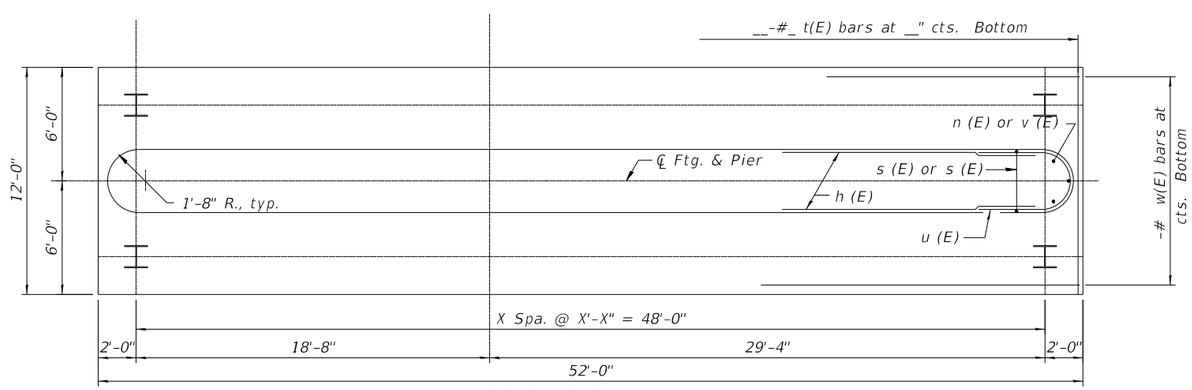

FOOTING PLAN

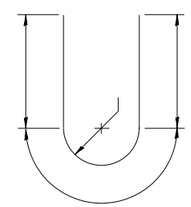

BAR u (E)

P-26 2-17-2017

MODEL: Sheet
FILE NAME: pw:\\aecom-na-pw.bentley.com:AECOM_DS16_NA\Documents\60603202-Brush College\900-CAD GIS\910_CAD\03_SHEETS\01_AECOM\Structural\60603202_S-28_Pier.dgn

AECOM

USER NAME = elif.ulger	DESIGNED -	REVISED -
	CHECKED -	REVISED -
PLOT SCALE = N.T.S.	DRAWN - MCC	REVISED -
PLOT DATE = 6/19/2020	CHECKED -	REVISED -

STATE OF ILLINOIS
DEPARTMENT OF TRANSPORTATION

PIER DETAILS
STRUCTURE NO. 058-9202

F.A.U. RTE.	SECTION	COUNTY	TOTAL SHEETS	SHEET NO.
7448	09-00933-01-BR	MACON	572	399
		CONTRACT NO. XXXX(XXX)		
	ILLINOIS	FED. AID PROJECT		

SOUTHERN REGION

DECATUR, ILLINOIS

ILLINOIS CENTRAL RAILROAD
ADM LEAD TRACK

PROJECT INFORMATION

PROPERTY OWNERS:	ILLINOIS CENTRAL RAILROAD COMPANY
FACILITY OWNER/OPERATOR:	ILLINOIS CENTRAL RAILROAD COMPANY
PLANS DEVELOPED BY:	AECOM CONTACT: RUSSELL COATE 303 EAST WACKER DRIVE SUITE 1400 CHICAGO, IL 60601 PHONE: (312) 861-4062
PROJECT OWNER:	ILLINOIS CENTRAL RAILROAD COMPANY CHICAGO DIVISION 17641 S ASHLAND AVE HOMEWOOD, IL 60430
REFERENCE DATUM:	HORIZONTAL: NAD 83 VERTICAL: NAVD 1988 SURVEY FEET
PROJECT SPECIFICATIONS:	CONTRACTOR SHALL ADHERE TO CN ENGINEERING SPECIFICATIONS FOR INDUSTRIAL TRACKS EFFECTIVE JUNE 15, 2011

INDEX OF DRAWINGS

SHEET NO.	TITLE
1 OF 10	IC RR TITLE SHEET
2 OF 10	IC RR TRACK PLAN AND PROFILE SHEET - STA. 1+00 TO STA. 5+60
3 OF 10	IC RR TRACK PLAN AND PROFILE SHEET - STA. 5+60 TO STA. 11+35
4 OF 10	IC RR TRACK PLAN AND PROFILE SHEET - STA. 11+35 TO STA. 16+10
5 OF 10	IC RR TRACK PLAN AND PROFILE SHEET - STA. 16+10 TO STA. 21+60
6 OF 10	IC RR TRACK PLAN AND PROFILE SHEET - STA. 21+60 TO STA. 27+10
7 OF 10	IC RR TRACK PLAN AND PROFILE SHEET - STA. 27+10 TO STA. 31+74
8 OF 10	TYPICAL SECTIONS
9 OF 10	TYPICAL SECTIONS
10 OF 10	TYPICAL SECTIONS

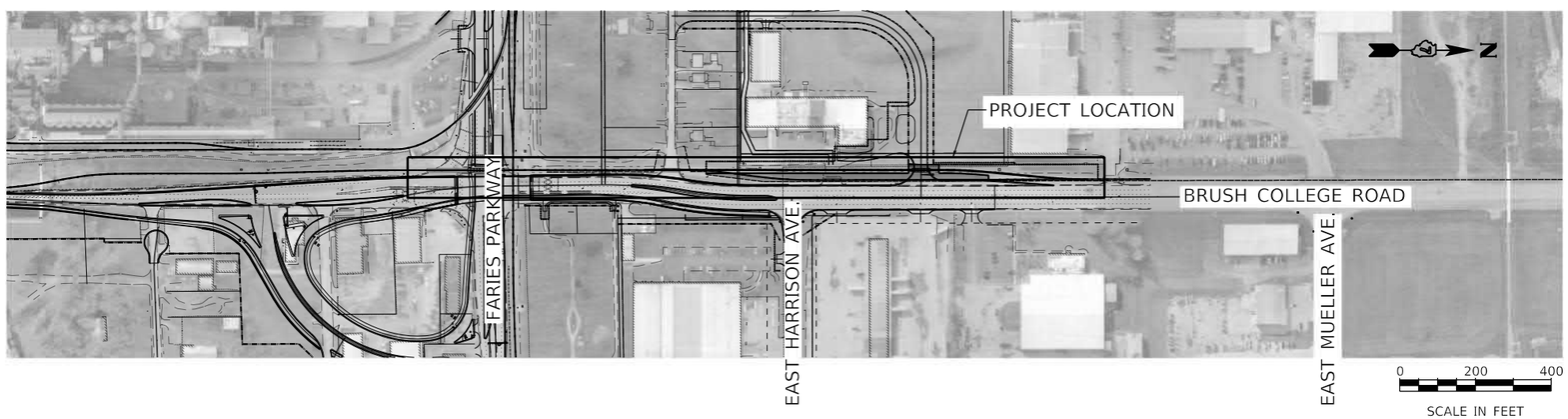

CN FOR RAILROAD REVIEW

MODEL: Default
FILE NAME: pw:\\aecom-na-pw.bentley.com:AECOM_DS16_NA\Documents\60603202-Brush College\900-CAD GIS\910_CAD\03_SHEETS\01_AECOM\Railroad\60603202_SHT_Cover_01_Brush-01.dgn

AECOM
345 EAST ASH AVENUE, SUITE B
DECATUR, IL 62526-4161
PHONE: (217) 875-4800 FAX: (217) 875-3577

USER NAME = matt.warriner	DESIGNED -	REVISED -
	DRAWN -	REVISED -
PLOT SCALE = 400.0000 ' / in.	CHECKED -	REVISED -
PLOT DATE = 6/12/2020	DATE - 6/12/2020	REVISED -

STATE OF ILLINOIS
DEPARTMENT OF TRANSPORTATION

BRUSH COLLEGE ROAD
IC RR TITLE SHEET

SCALE: 1"=200' | SHEET 1 OF 10 SHEETS | STA. TO STA.

F.A.U. RTE.	SECTION	COUNTY	TOTAL SHEETS	SHEET NO.
	09-00933-01-BR	MACON	572	400
		CONTRACT NO. XXXX(XXX)		
	ILLINOIS	FED. AID PROJECT		

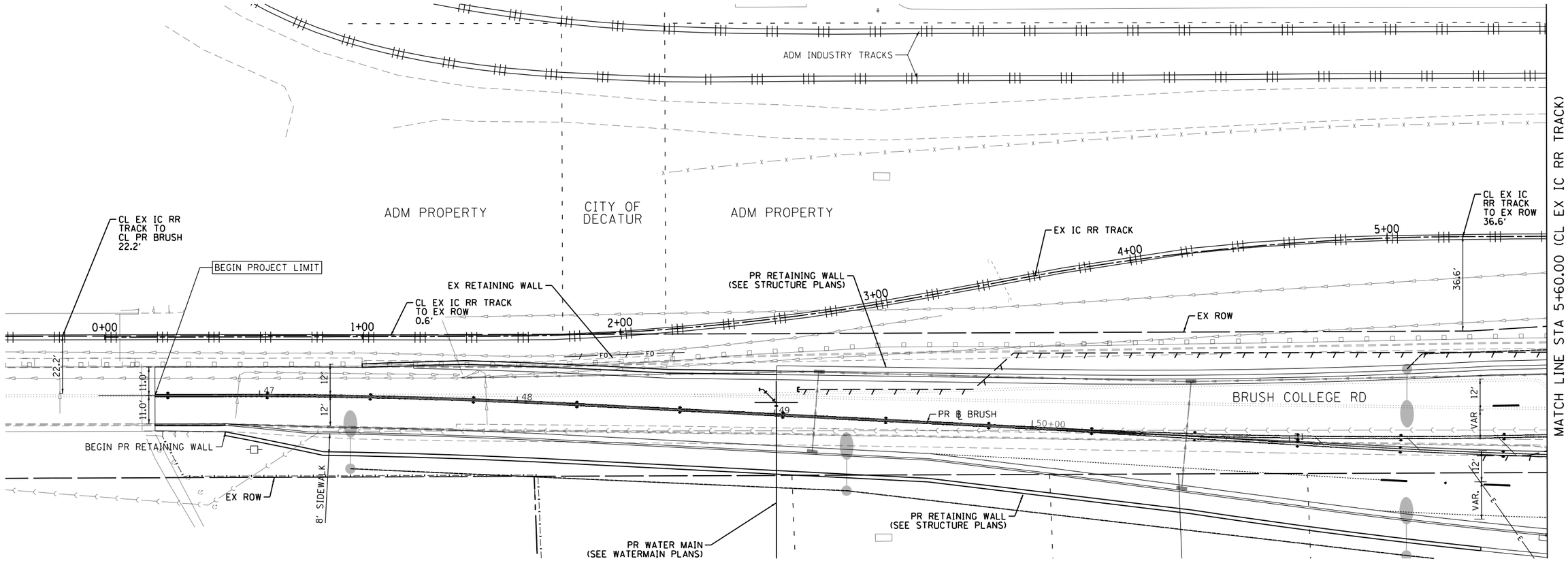

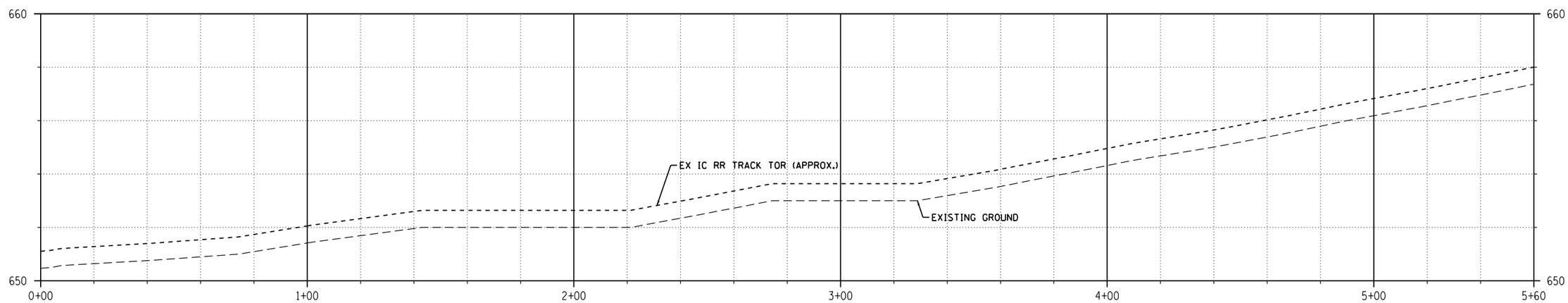

PROFILE IC RR TRACK

0 20 40 FEET
HORIZONTAL SCALE

0 2 4 FEET
VERTICAL SCALE

FOR REFERENCE ONLY. NOT FOR CONSTRUCTION.

MODEL: Default
FILE NAME: pw:\\aecom-na-pw.bentley.com:AECOM_DS16_NA\Documents\60603202-Brush College\900-CAD GIS\910_CAD\03_SHEETS\01_AECOM\Railroad\60603202_SHT_Plan_01_Brush-01.dgn

AECOM
345 EAST ASH AVENUE, SUITE B
DECATUR, IL 62526-6161
PHONE: (217) 875-4800 FAX: (217) 875-3577

USER NAME = matt.warriner	DESIGNED - ---	REVISED -	
	DRAWN - ---	REVISED -	
PLOT SCALE = 40.0000 ' / in.	CHECKED - ---	REVISED -	
PLOT DATE = 6/12/2020	DATE - 6/12/2020	REVISED -	

STATE OF ILLINOIS
DEPARTMENT OF TRANSPORTATION

BRUSH COLLEGE ROAD
IC RR TRACK PLAN AND PROFILE SHEET

SCALE: 1"=20' | SHEET 2 OF 10 SHEETS | STA. 1+00.00 TO STA. 5+60.00

F.A.U. RTE.	SECTION	COUNTY	TOTAL SHEETS	SHEET NO.
	09-00933-01-BR	MACON	572	401
		CONTRACT NO. XXXX(XXX)		
	ILLINOIS	FED. AID PROJECT		

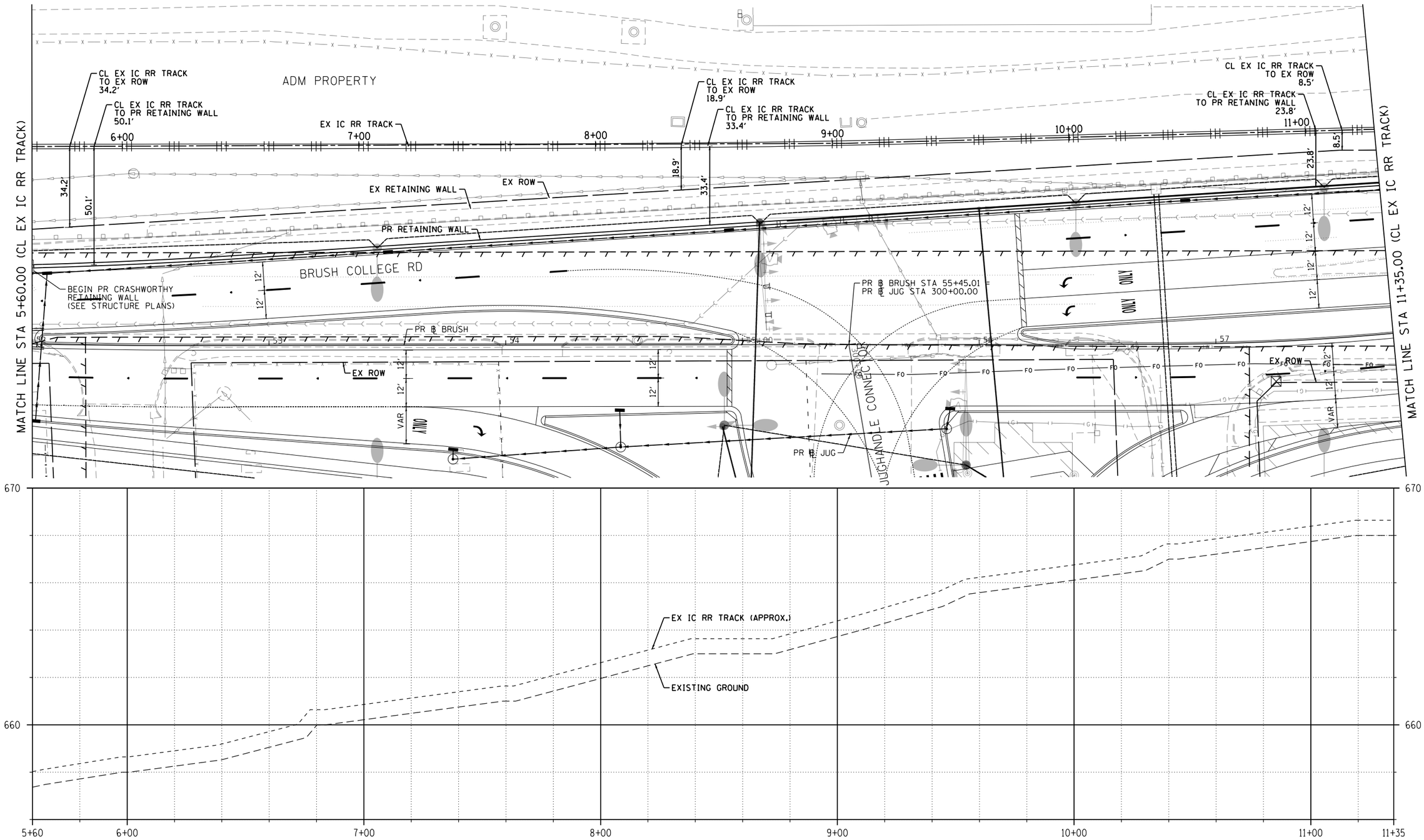

PROFILE IC RR TRACK

FOR REFERENCE ONLY. NOT FOR CONSTRUCTION.

0 20 40 FEET — HORIZONTAL SCALE

0 2 4 — VERTICAL SCALE

MODEL: Default
FILE NAME: pw:\\aecom-na-pw.bentley.com:AECOM_DS16_NA\Documents\60603202-Brush College\900-CAD GIS\910_CAD\03_SHEETS\01_AECOM\Railroad\60603202_SHT_Plan_02_Brush02.dgn

AECOM
345 EAST ASH AVENUE, SUITE B
DECATUR, IL 62526-6161
PHONE: (217) 875-4800 FAX: (217) 875-3577

USER NAME = matt.warriner	DESIGNED - ---	REVISED -	
	DRAWN - ---	REVISED -	
PLOT SCALE = 40.0000 ' / in.	CHECKED - ---	REVISED -	
PLOT DATE = 6/12/2020	DATE - 6/12/2020	REVISED -	

STATE OF ILLINOIS
DEPARTMENT OF TRANSPORTATION

BRUSH COLLEGE ROAD
IC RR TRACK PLAN AND PROFILE SHEET

SCALE: 1"=20' | SHEET 3 OF 10 SHEETS | STA. 5+60.00 TO STA. 11+35.00

F.A.U. RTE.	SECTION	COUNTY	TOTAL SHEETS	SHEET NO.
	09-00933-01-BR	MACON	572	402
		CONTRACT NO. XXXX(XXX)		
	ILLINOIS	FED. AID PROJECT		

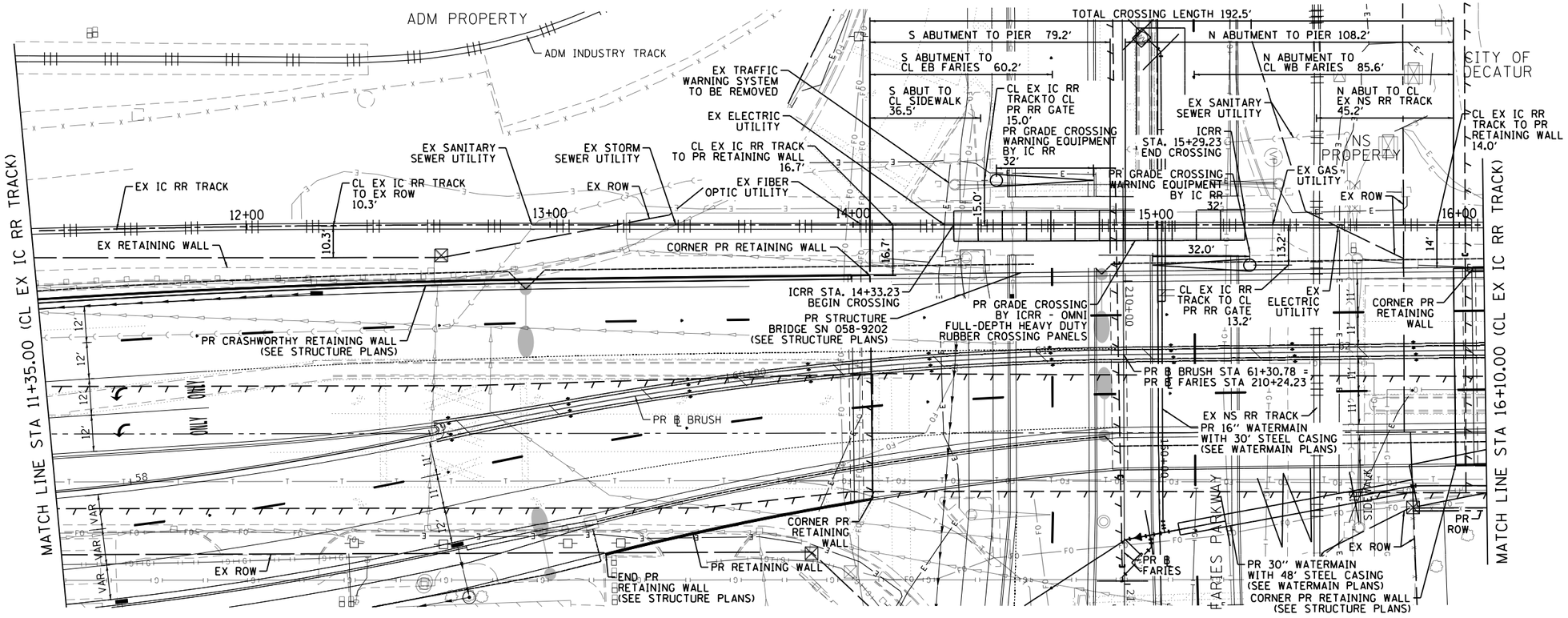

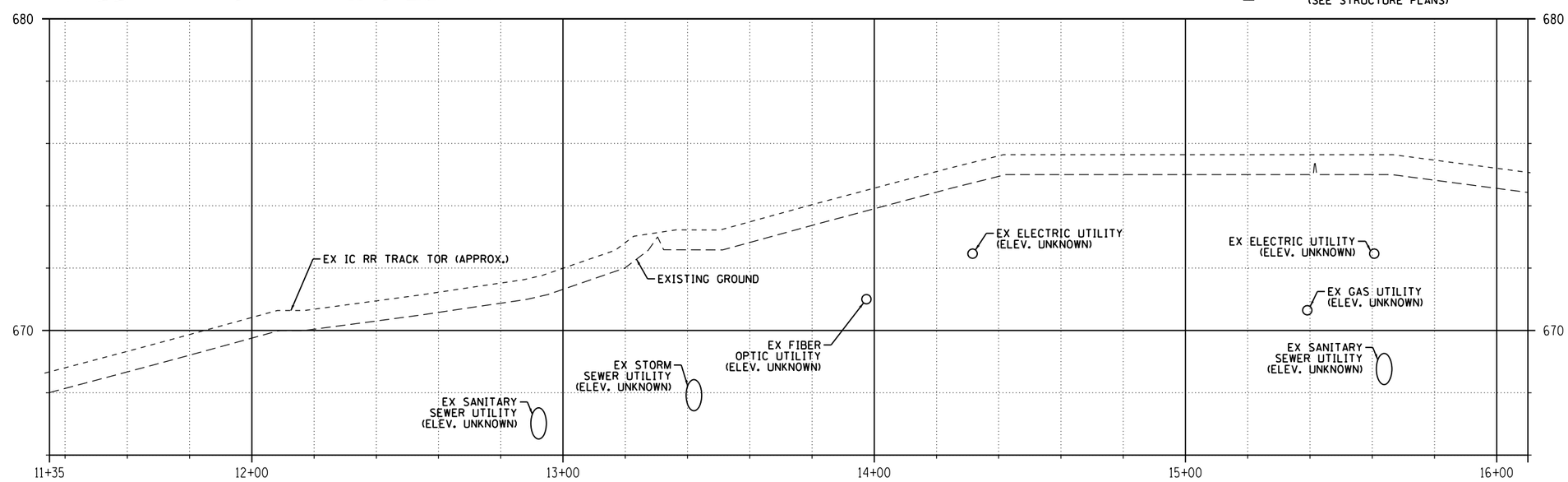

PROFILE IC RR TRACK

N

0 20 40 FEET
HORIZONTAL SCALE

0 2 4 FEET
VERTICAL SCALE

FOR REFERENCE ONLY. NOT FOR CONSTRUCTION.

MODEL: Default
FILE NAME: pw:\\aecom-na-pw.bentley.com:AECOM_DS16_NA\Documents\60603202-Brush College 900-CAD GIS\910_CAD\03_SHEETS\01_AECOM\Railroad\60603202_SHT_Plan_03_Brush03.dgn

AECOM
345 EAST ASH AVENUE, SUITE B
DECATUR, IL 62526-6161
PHONE: (217) 875-4800 FAX: (217) 875-3577

USER NAME = matt.warriner	DESIGNED - ---	REVISED -	
	DRAWN - ---	REVISED -	
PLOT SCALE = 40.0000 ' / in.	CHECKED - ---	REVISED -	
PLOT DATE = 6/12/2020	DATE - 6/12/2020	REVISED -	

STATE OF ILLINOIS
DEPARTMENT OF TRANSPORTATION

BRUSH COLLEGE ROAD
IC RR TRACK PLAN AND PROFILE SHEET

SCALE: 1"=20' | SHEET 4 OF 10 SHEETS | STA. 11+35.00 TO STA. 16+10.00

F.A.U. RTE.	SECTION	COUNTY	TOTAL SHEETS	SHEET NO.
	09-00933-01-BR	MACON	572	403
		CONTRACT NO. XXXX(XXX)		
	ILLINOIS	FED. AID PROJECT		

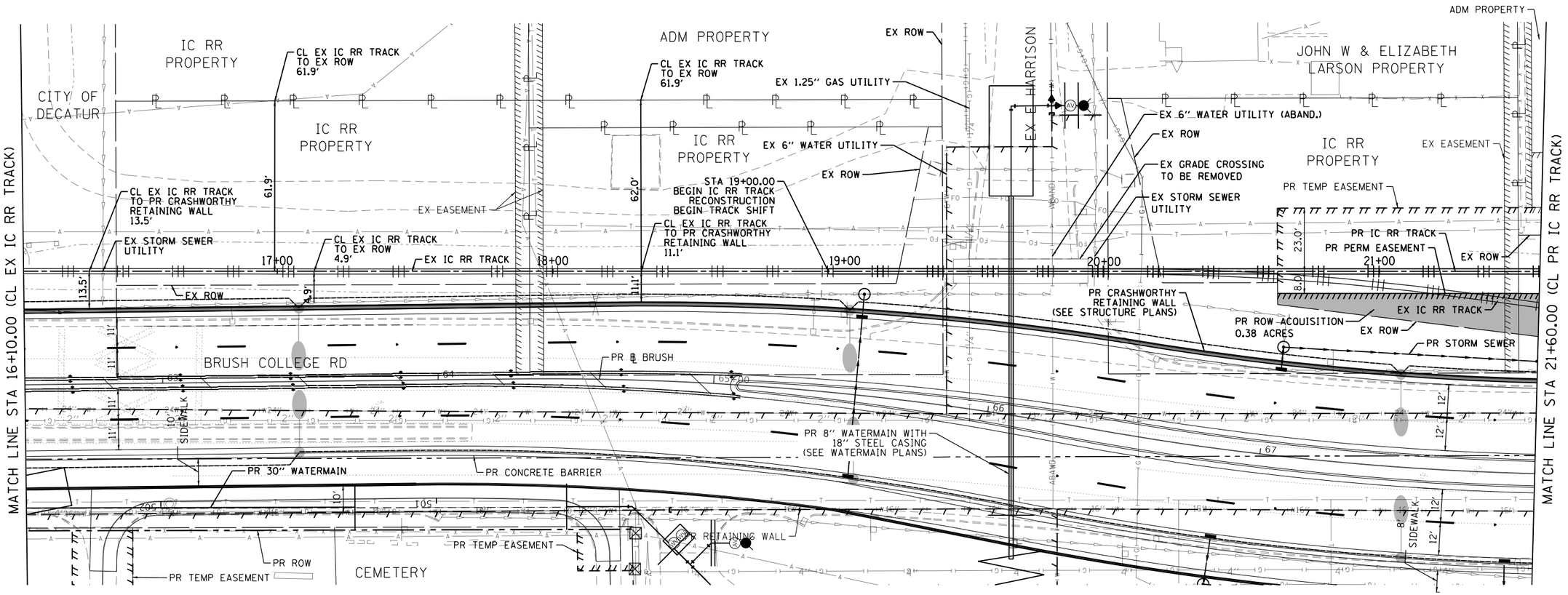

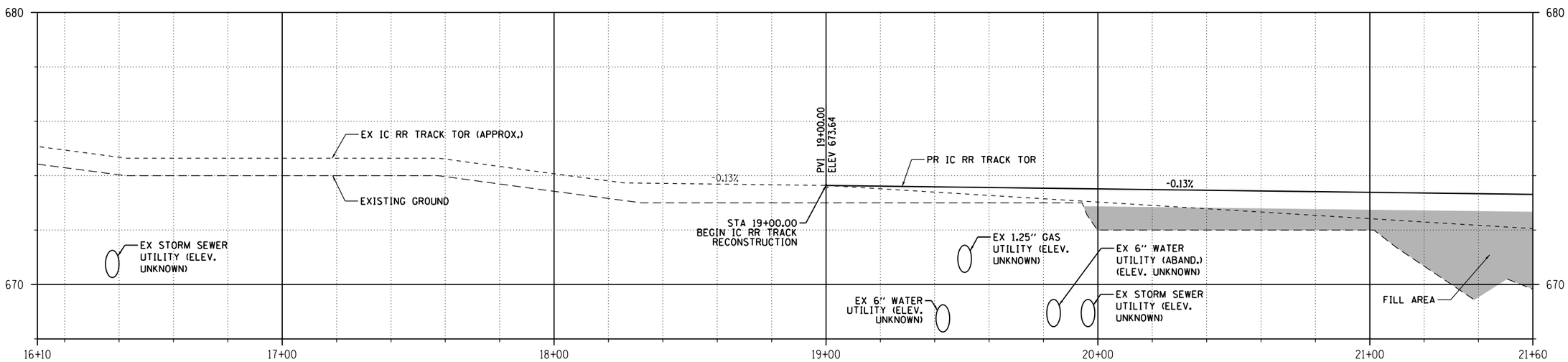

PROFILE IC RR TRACK

0 20 40 FEET — HORIZONTAL SCALE

0 2 4 FEET — VERTICAL SCALE

FOR REFERENCE ONLY. NOT FOR CONSTRUCTION.

MODEL: Default
FILE NAME: pw:\\aecom-na-pw.bentley.com:AECOM_DS16_NA\Documents\60603202-Brush College\900-CAD GIS\910_CAD\03_SHEETS\01_AECOM\Railroad\60603202_SHT_Plan_04_Brush04.dgn

AECOM
345 EAST ASH AVENUE, SUITE B
DECATUR, IL 62526-6161
PHONE: (217) 875-4800 FAX: (217) 875-3577

USER NAME = matt.warriner	DESIGNED - ---	REVISED -	
	DRAWN - ---	REVISED -	
PLOT SCALE = 40.0000 ' / in.	CHECKED - ---	REVISED -	
PLOT DATE = 6/12/2020	DATE - 6/12/2020	REVISED -	

STATE OF ILLINOIS
DEPARTMENT OF TRANSPORTATION

BRUSH COLLEGE ROAD
PR IC RR TRACK PLAN AND PROFILE SHEET

SCALE: 1"=20' | SHEET 5 OF 10 SHEETS | STA. 16+10.00 TO STA. 21+60.00

F.A.U. RTE.	SECTION	COUNTY	TOTAL SHEETS	SHEET NO.
	09-00933-01-BR	MACON	572	404
		CONTRACT NO. XXXX(XXX)		
	ILLINOIS	FED. AID PROJECT		

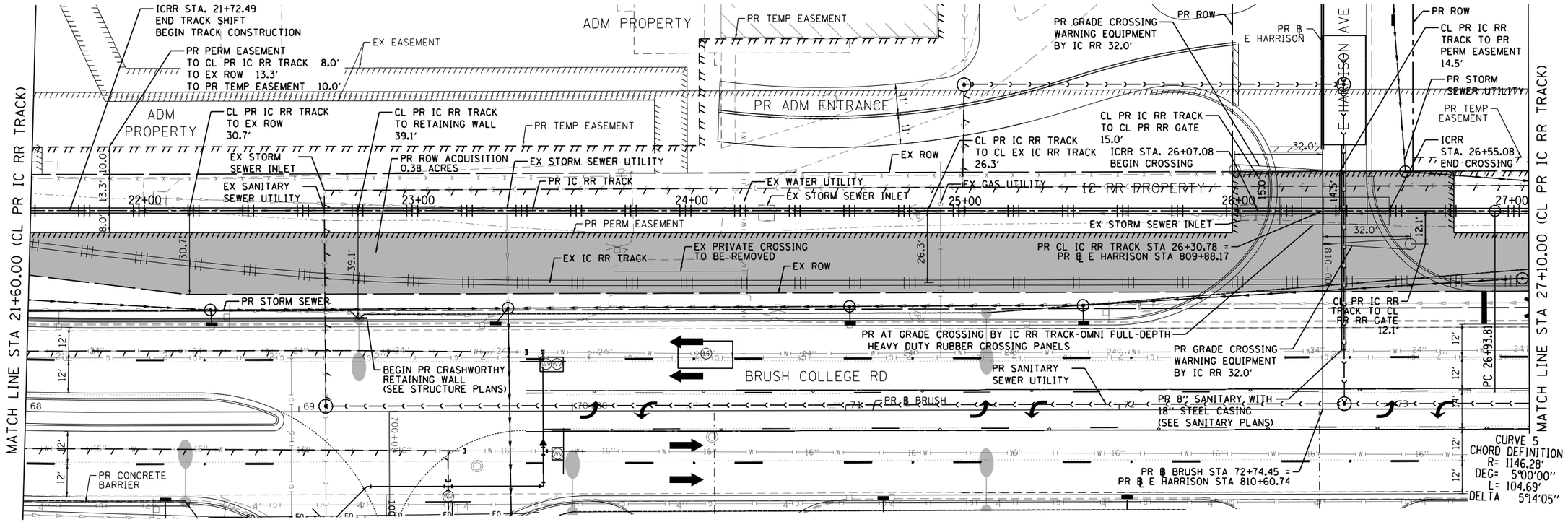

PROFILE IC RR TRACK

0 20 40 FEET
HORIZONTAL SCALE

0 2 4 FEET
VERTICAL SCALE

FOR REFERENCE ONLY. NOT FOR CONSTRUCTION.

MODEL: Default
FILE NAME: pw:\\aecom-na-pw.bentley.com:AECOM_DS16_NA\Documents\60603202-Brush College\900-CAD GIS\910_CAD\03_SHEETS\01_AECOM\Railroad\60603202_SHT_Plan_05_Brush-05.dgn

AECOM
345 EAST ASH AVENUE, SUITE B
DECATUR, IL 62526-6161
PHONE: (217) 875-8800 FAX: (217) 875-3577

USER NAME = matt.warriner	DESIGNED - ---	REVISED -	
	DRAWN - ---	REVISED -	
PLOT SCALE = 40.0000 ' / in.	CHECKED - ---	REVISED -	
PLOT DATE = 6/12/2020	DATE - 6/12/2020	REVISED -	

STATE OF ILLINOIS
DEPARTMENT OF TRANSPORTATION

BRUSH COLLEGE ROAD
IC RR TRACK PLAN AND PROFILE SHEET

SCALE: 1"=20' | SHEET 6 OF 10 SHEETS | STA. 21+60.00 TO STA. 27+10.00

F.A.U. RTE.	SECTION	COUNTY	TOTAL SHEETS	SHEET NO.
	09-00933-01-BR	MACON	572	405
		CONTRACT NO. XXXX(XXX)		
	ILLINOIS	FED. AID PROJECT		

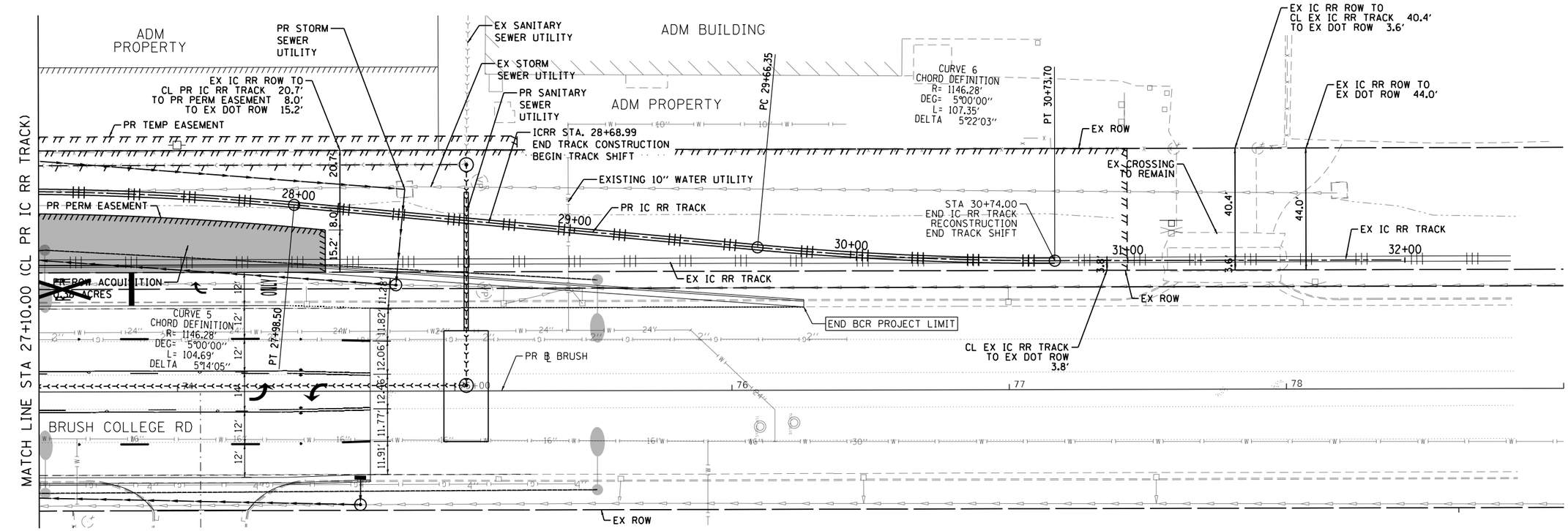

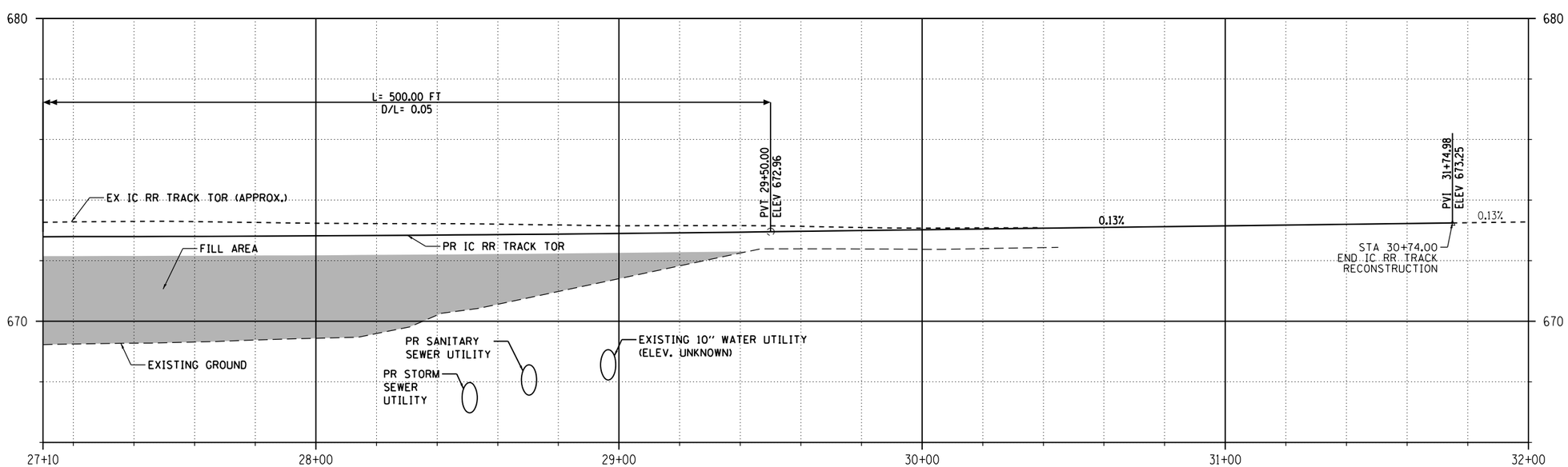

PROFILE IC RR TRACK

0 20 40 FEET — HORIZONTAL SCALE

0 2 4 FEET — VERTICAL SCALE

FOR REFERENCE ONLY. NOT FOR CONSTRUCTION.

MODEL: Default
FILE NAME: pw:\\aecom-nasxw.bentley.com:AECOM_DS16_NA\Documents\60603202-Brush College\900-CAD GIS\910_CAD\03_SHEETS\01_AECOM\Railroad\60603202_SHT_Plan_06_Brush-06.dgn

AECOM
345 EAST ASH AVENUE, SUITE B
DECATUR, IL 62526-6161
PHONE: (217) 875-4800 FAX: (217) 875-3577

USER NAME = matt.warriner	DESIGNED - ---	REVISED -
	DRAWN - ---	REVISED -
PLOT SCALE = 40.0000 ' / in.	CHECKED - ---	REVISED -
PLOT DATE = 6/12/2020	DATE - 6/12/2020	REVISED -

STATE OF ILLINOIS
DEPARTMENT OF TRANSPORTATION

BRUSH COLLEGE ROAD
PR IC RR TRACK PLAN AND PROFILE SHEET

SCALE: 1"=20' | SHEET 7 OF 10 SHEETS | STA. 27+10.00 TO STA.

F.A.U. RTE.	SECTION	COUNTY	TOTAL SHEETS	SHEET NO.
	09-00933-01-BR	MACON	572	406
		CONTRACT NO. XXXX(XXX)		
	ILLINOIS	FED. AID PROJECT		

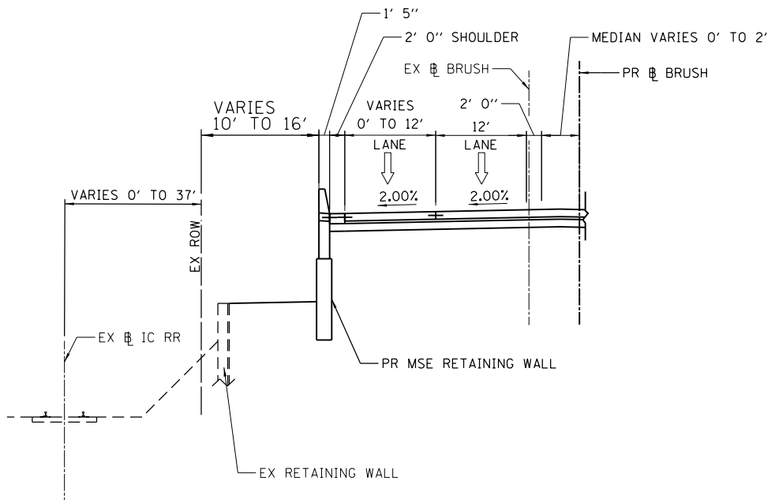

PROPOSED BRUSH COLLEGE ROAD

LOOKING NORTH

EX ℄ IC RR TRACK STA 1+00.00 TO STA 5+00.00

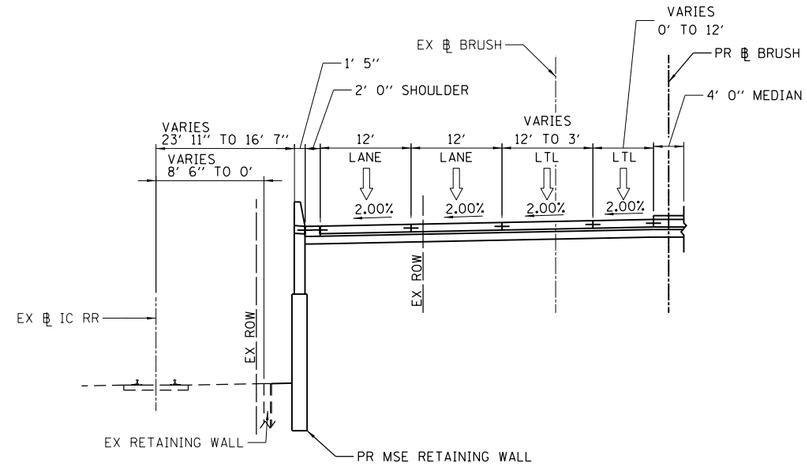

PROPOSED BRUSH COLLEGE ROAD

LOOKING NORTH

EX ℄ IC RR TRACK STA 11+60.00 TO STA 14+05.00

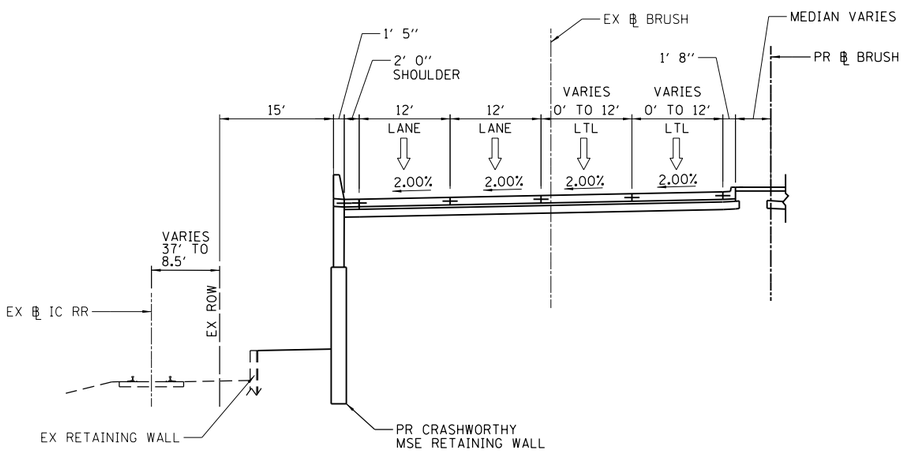

PROPOSED BRUSH COLLEGE ROAD

LOOKING NORTH

EX ℄ IC RR TRACK STA 5+00.00 TO STA 11+60.00

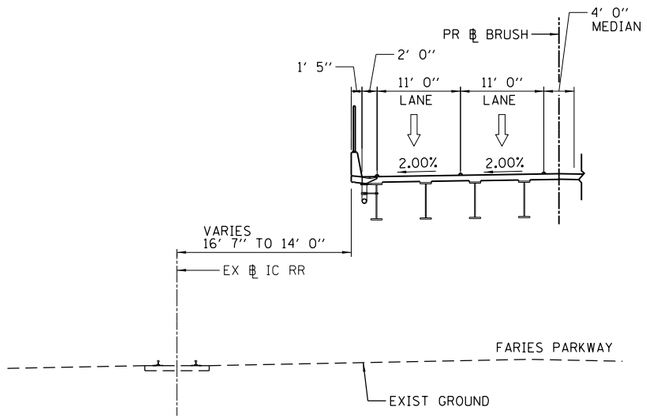

PROPOSED BRUSH COLLEGE ROAD OVERPASS STRUCTURE

LOOKING NORTH

EX ℄ IC RR TRACK STA 14+05.00 TO STA 16+00.00

MODEL: Default
FILE NAME: pw:\\aecom-na-pw.bentley.com:AECOM_DS16_NA\Documents\60603202-Brush College\900-CAD GIS\910_CAD\03_SHEETS\01_AECOM\Railroad\60603202_Typical Sections-06_BCR.dgn

AECOM
345 EAST ASH AVENUE, SUITE B
DECATUR, IL 62526-6161
PHONE: (217) 875-4800 FAX: (217) 875-3577

USER NAME = matt.warriner	DESIGNED - ---	REVISED -	
	DRAWN - ---	REVISED -	
PLOT SCALE = 20.0000 ' / in.	CHECKED - ---	REVISED -	
PLOT DATE = 6/12/2020	DATE - 6/12/2020	REVISED -	

STATE OF ILLINOIS
DEPARTMENT OF TRANSPORTATION

BRUSH COLLEGE ROAD
ICRR TRACK PLANS – TYPICAL SECTIONS

SCALE: 1"=10' | SHEET 8 OF 10 SHEETS | STA. 1+00.00 TO STA. 15+90.00

F.A.U. RTE.	SECTION	COUNTY	TOTAL SHEETS	SHEET NO.
	09-00933-01-BR	MACON	572	407
		CONTRACT NO. XXXX(XXX)		
	ILLINOIS	FED. AID PROJECT		

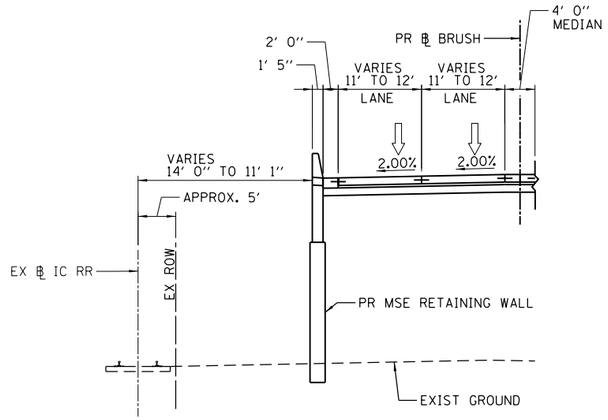

PROPOSED BRUSH COLLEGE ROAD

LOOKING NORTH

EX ℄ IC RR TRACK STA 16+00.00 TO STA 19+00.00

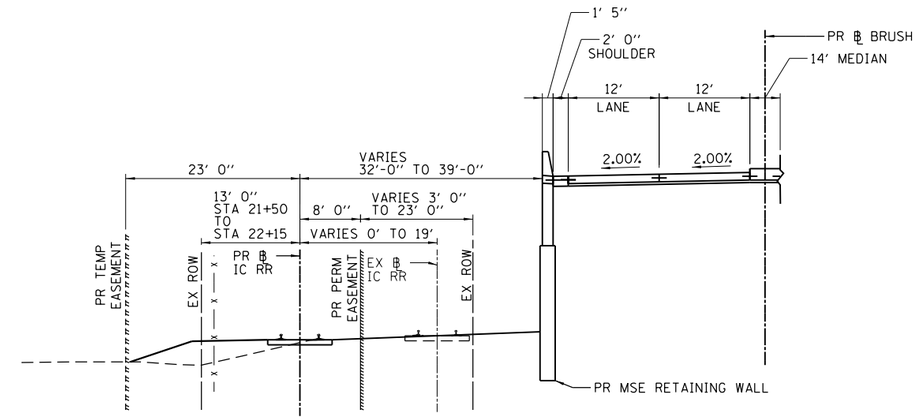

PROPOSED BRUSH COLLEGE ROAD

LOOKING NORTH

PR ℄ IC RR TRACK STA 20+65.00 TO STA 22+15.00

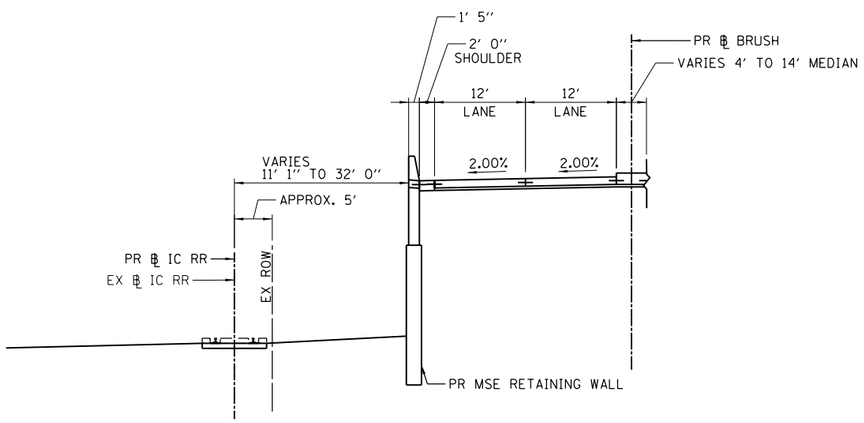

PROPOSED BRUSH COLLEGE ROAD

LOOKING NORTH

PR ℄ IC RR TRACK STA 19+00.00 TO STA 20+65.00

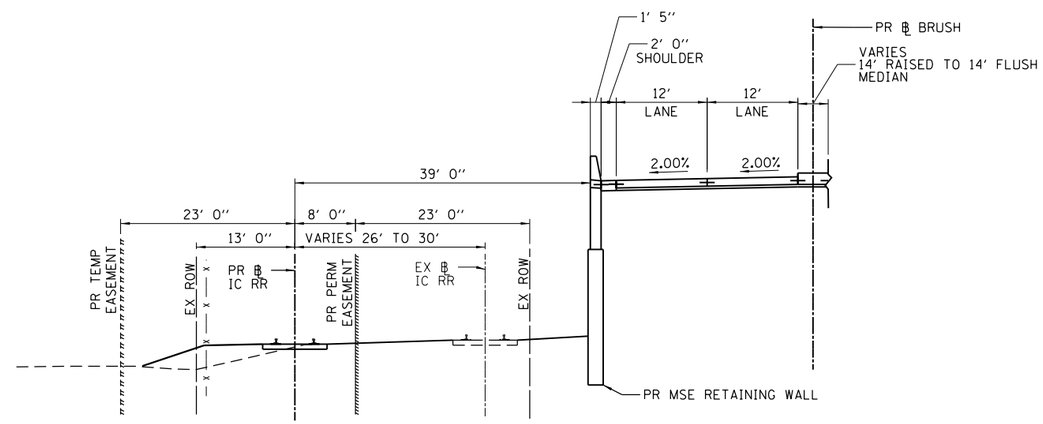

PROPOSED BRUSH COLLEGE ROAD

LOOKING NORTH

PR ℄ IC RR TRACK STA 22+15.00 TO STA 22+80.00

MODEL: Default
FILE NAME: pw:\\aecomna-pw.bentley.com:AECOM_DS16_NA\Documents\60603202-Brush College\900-CAD GIS\910_CAD\03_SHEETS\01_AECOM\Railroad\60603202_Typical Sections-07_BCR.dgn

AECOM
345 EAST ASH AVENUE, SUITE B
DECATUR, IL 62526-6161
PHONE: (217) 875-4800 FAX: (217) 875-3577

USER NAME = matt.warriner	DESIGNED - ---	REVISED -	
	DRAWN - ---	REVISED -	
PLOT SCALE = 20.0000 ' / in.	CHECKED - ---	REVISED -	
PLOT DATE = 6/12/2020	DATE - 6/12/2020	REVISED -	

STATE OF ILLINOIS
DEPARTMENT OF TRANSPORTATION

BRUSH COLLEGE ROAD
TYPICAL SECTIONS

SCALE: 1"=10' | SHEET 9 OF 10 SHEETS | STA. 15+90.00 TO STA. 22+80.00

F.A.U. RTE.	SECTION	COUNTY	TOTAL SHEETS	SHEET NO.
	09-00933-01-BR	MACON	572	408
		CONTRACT NO. XXXX(XXX)		
	ILLINOIS	FED. AID PROJECT		

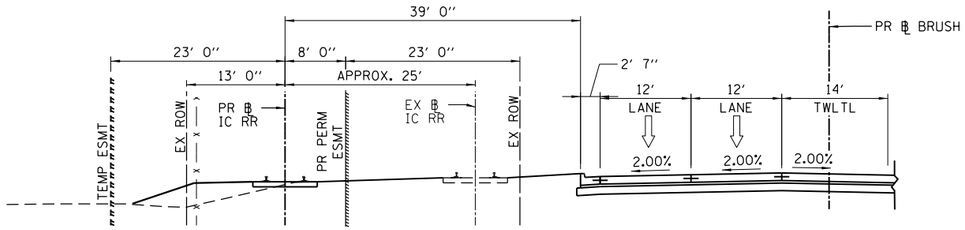

PROPOSED BRUSH COLLEGE ROAD

LOOKING NORTH

PR ℄ IC RR TRACK STA 22+80.00 TO STA 26+00.00

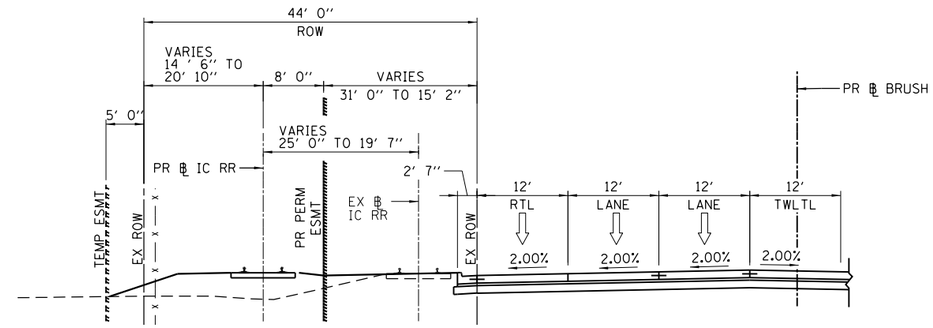

PROPOSED BRUSH COLLEGE ROAD

LOOKING NORTH

PR ℄ IC RR TRACK STA 26+80.00 TO STA 28+10.00

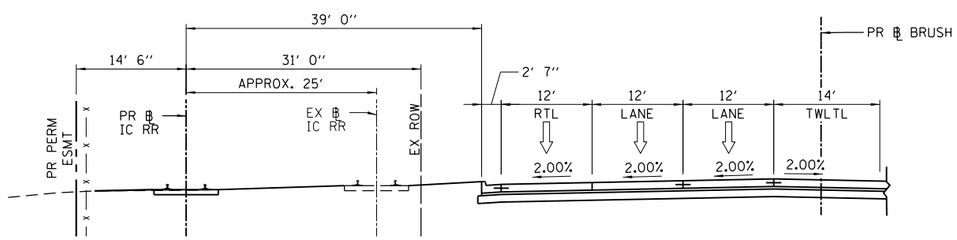

PROPOSED BRUSH COLLEGE ROAD

LOOKING NORTH

PR ℄ IC RR TRACK STA 26+00.00 TO STA 26+80.00

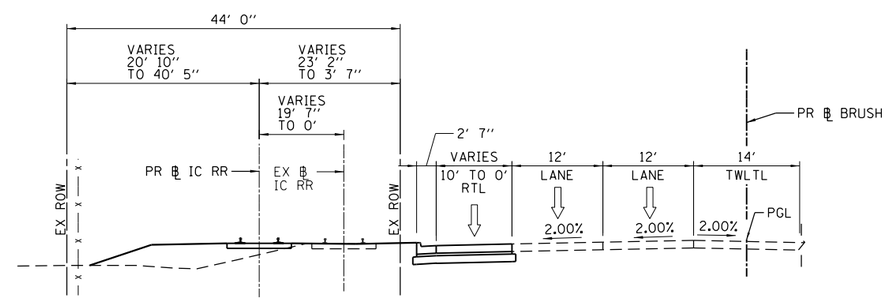

PROPOSED BRUSH COLLEGE ROAD

LOOKING NORTH

PR ℄ IC RR TRACK STA 28+10.00 TO STA 30+75.00

MODEL: Default
FILE NAME: pw:\\aecomna-pw.bentley.com:AECOM_DS16_NA\Documents\60603202-Brush College\900-CAD GIS\910_CAD\03_SHEETS\01_AECOM\Railroad\60603202_Typical Sections-08_BCR.dgn

AECOM
345 EAST ASH AVENUE, SUITE B
DECATUR, IL 62526-6161
PHONE: (217) 875-4800 FAX: (217) 875-3577

USER NAME = matt.warriner	DESIGNED - ---	REVISED -	
	DRAWN - ---	REVISED -	
PLOT SCALE = 20.0000 ' / in.	CHECKED - ---	REVISED -	
PLOT DATE = 6/12/2020	DATE - 6/12/2020	REVISED -	

STATE OF ILLINOIS
DEPARTMENT OF TRANSPORTATION

BRUSH COLLEGE ROAD
TYPICAL SECTIONS

SCALE: 1"=10' | SHEET 10 OF 10 SHEETS | STA. 22+80.00 TO STA. 30+75.00

F.A.U. RTE.	SECTION	COUNTY	TOTAL SHEETS	SHEET NO.
	09-00933-01-BR	MACON	572	409
		CONTRACT NO. XXXX(XXX)		
	ILLINOIS	FED. AID PROJECT		

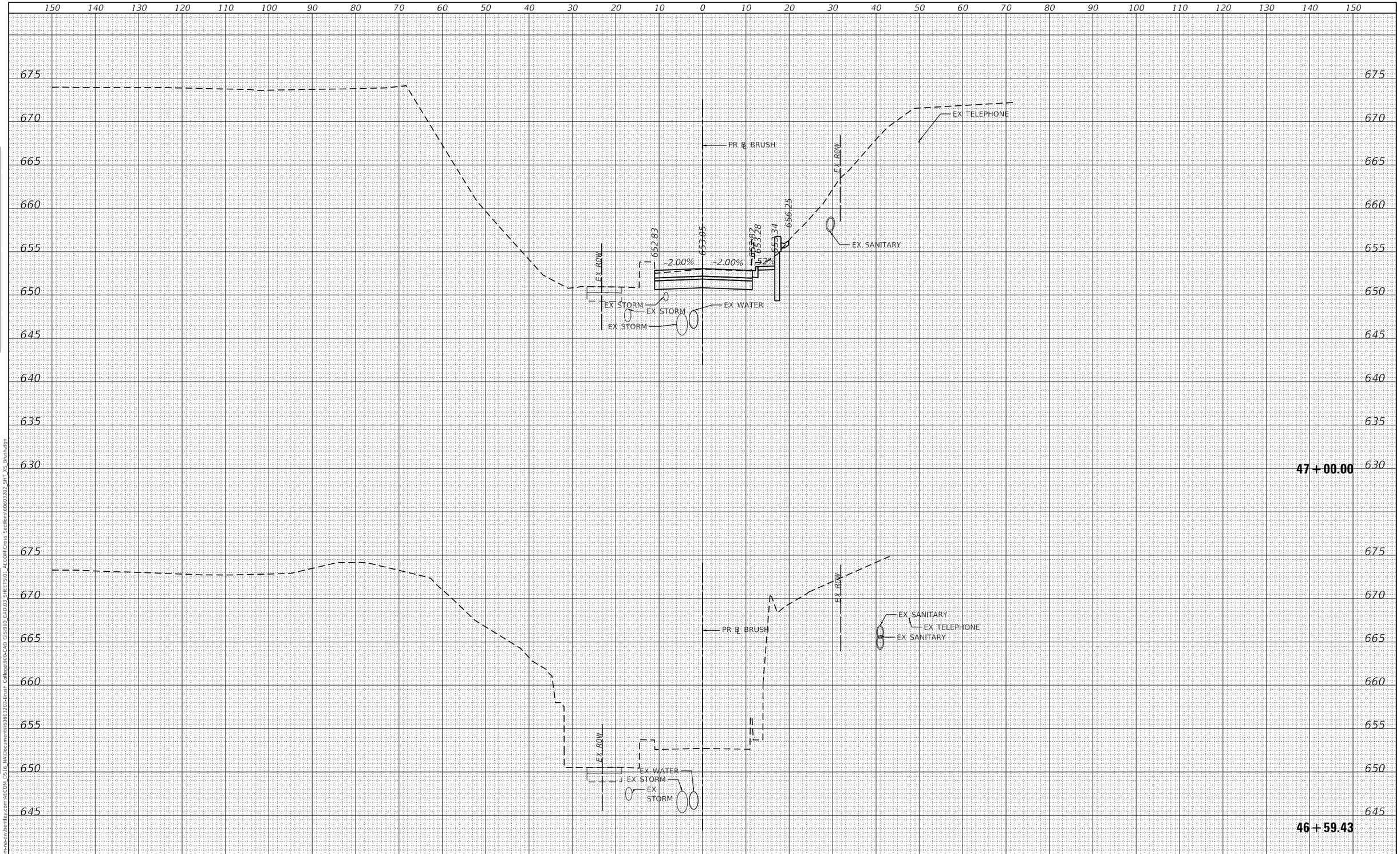

FINAL SURVEY	BY	DATE
SURVEYED		
PLOTTED		
TEMPLATE		
AREAS		
AREAS CHECKED		
NOTE BOOK		
NO.		

ORIGINAL SURVEY	BY	DATE
SURVEYED		
PLOTTED		
TEMPLATE		
AREAS		
AREAS CHECKED		
NOTE BOOK		
NO.		

MODEL: Default
FILE NAME: pw:\\aecom-na-pw.bentley.com:AECOM DS16 NA\Documents\60603202-Brush College\900-CAD GIS\910_CAD\03 SHEETS\01 AECOM\Cross Sections\60603202 SHT XS Brush.dgn

AECOM
345 EAST ASH AVENUE, SUITE B
DECATUR, IL 62526-6161
PHONE: (217) 875-4800 FAX: (217) 875-3577

USER NAME = meron.asnake	DESIGNED - LMB	REVISED -	
	DRAWN - LMB	REVISED -	
PLOT SCALE = 20.0000 ' / in.	CHECKED - WBS	REVISED -	
PLOT DATE = 6/19/2020	DATE - 6/12/2020	REVISED -	

STATE OF ILLINOIS
DEPARTMENT OF TRANSPORTATION

BRUSH COLLEGE ROAD
CROSS SECTIONS

SCALE: 1"=10H':5V' | SHEET 1 OF 48 SHEETS | STA. 46+59.43 TO STA. 47+00.00

F.A.U. RTE.	SECTION	COUNTY	TOTAL SHEETS	SHEET NO.
7448	09-00933-01-BR	MACON	572	410
		CONTRACT NO. XXXX(XXX)		
		ILLINOIS	FED. AID PROJECT	

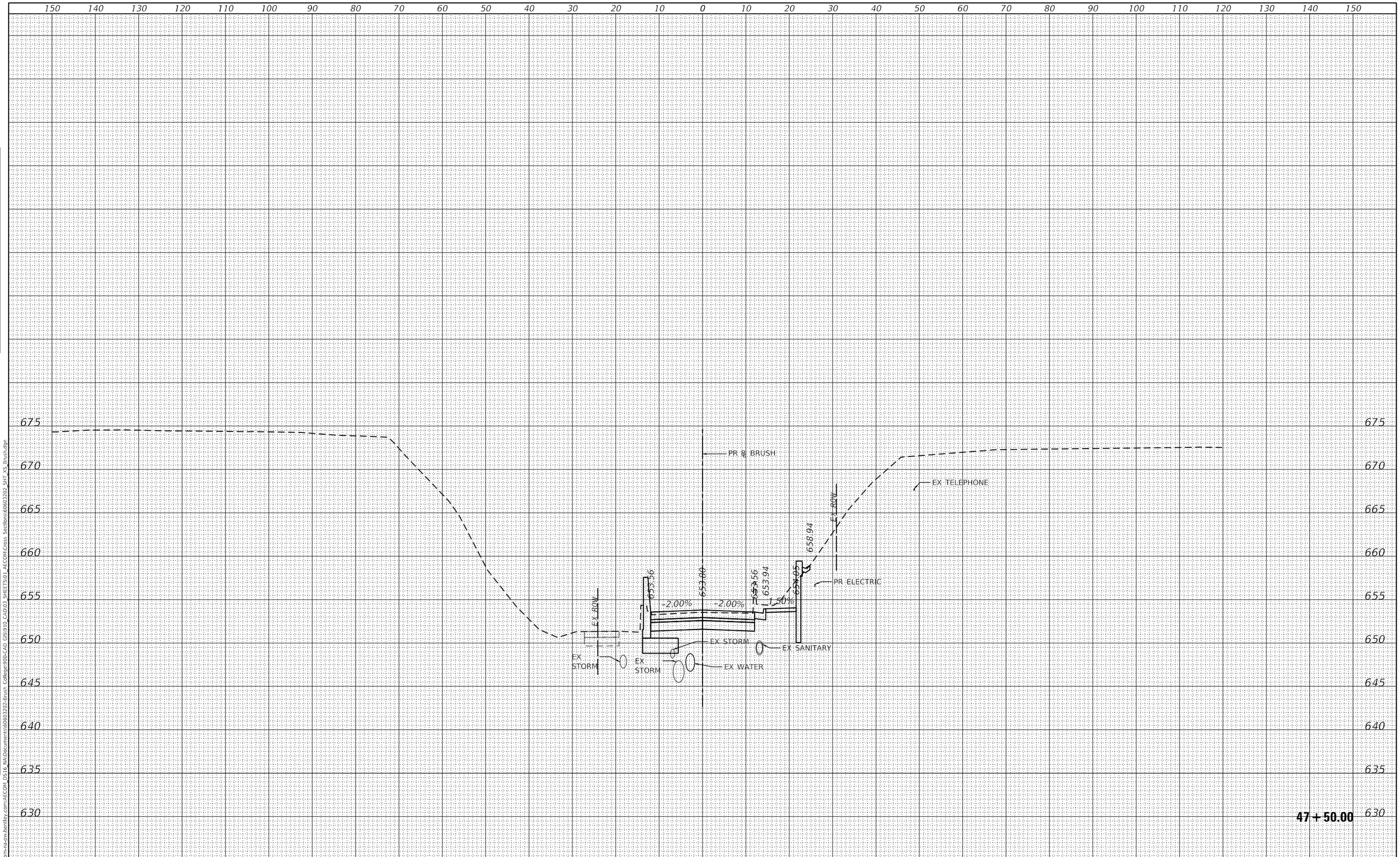

FINAL SURVEY		BY	DATE
NOTE BOOK	SURVEYED		
	PLOTTED		
	TEMPLATE		
	AREAS		
NO.	AREAS CHECKED		

ORIGINAL SURVEY		BY	DATE
NOTE BOOK	SURVEYED		
	PLOTTED		
	TEMPLATE		
	AREAS		
NO.	AREAS CHECKED		

MODEL: Default
FILE NAME: pw:\\aecom-na-pw.bentley.com:AECOM DS16 NA\Documents\60603202-Brush College\900-CAD GIS\910 CAD\03 SHEETS\01 AECOM\Cross Sections\60603202_SHT XS Brush.dgn

AECOM
345 EAST ASH AVENUE, SUITE B
DECATUR, IL 62526-6161
PHONE: (217) 875-4800 FAX: (217) 875-3577

USER NAME = meron.asnake	DESIGNED - LMB	REVISED -	
	DRAWN - LMB	REVISED -	
PLOT SCALE = 20.0000 ' / in.	CHECKED - WBS	REVISED -	
PLOT DATE = 6/19/2020	DATE - 6/12/2020	REVISED -	

STATE OF ILLINOIS
DEPARTMENT OF TRANSPORTATION

BRUSH COLLEGE ROAD
CROSS SECTIONS

SCALE: 1"=10H':5V' | SHEET 2 OF 48 SHEETS | STA. 47+50.00 TO STA. 47+50.00

F.A.U. RTE.	SECTION	COUNTY	TOTAL SHEETS	SHEET NO.
7448	09-00933-01-BR	MACON	572	411
		CONTRACT NO. XXXX(XXX)		
		ILLINOIS	FED. AID PROJECT	

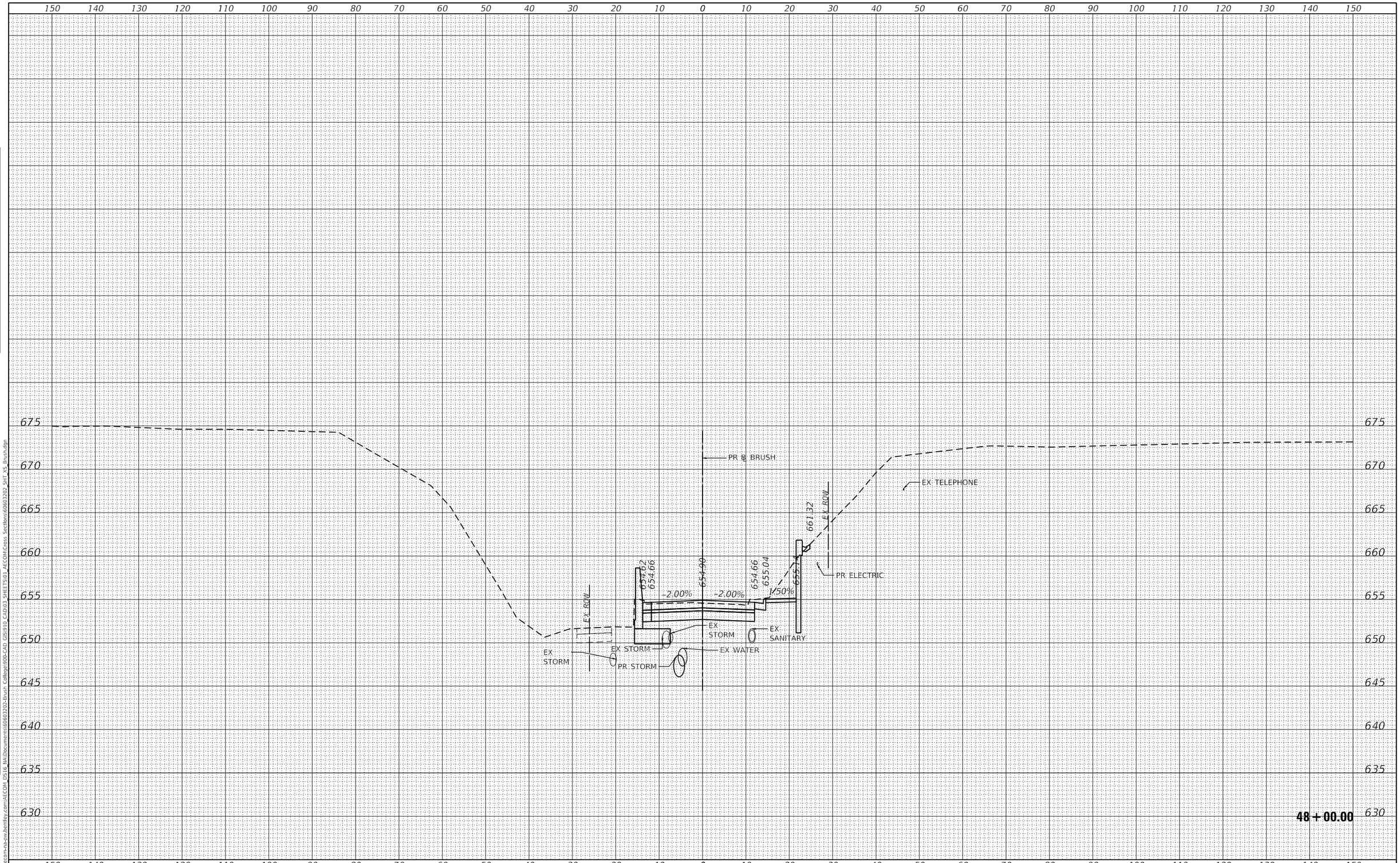

FINAL SURVEY	BY	DATE
SURVEYED		
PLOTTED		
TEMPLATE		
AREAS		
AREAS CHECKED		
NOTE BOOK		
NO.		

ORIGINAL SURVEY	BY	DATE
SURVEYED		
PLOTTED		
TEMPLATE		
AREAS		
AREAS CHECKED		
NOTE BOOK		
NO.		

MODEL: Default
FILE NAME: pw:\\aecom-na-pw.bentley.com:AECOM_DS16_NA\Documents\60603202-Brush College\900-CAD GIS\910_CAD\03_SHEETS\01_AECOM\Cross Sections\60603202_SHT_XS_Brush.dgn

AECOM
345 EAST ASH AVENUE, SUITE B
DECATUR, IL 62526-6161
PHONE: (217) 875-4800 FAX: (217) 875-3577

USER NAME = meron.asnake	DESIGNED - LMB	REVISED -	
	DRAWN - LMB	REVISED -	
PLOT SCALE = 20.0000 ' / in.	CHECKED - WBS	REVISED -	
PLOT DATE = 6/19/2020	DATE - 6/12/2020	REVISED -	

STATE OF ILLINOIS
DEPARTMENT OF TRANSPORTATION

BRUSH COLLEGE ROAD
CROSS SECTIONS

SCALE: 1"=10H':5V' | SHEET 3 OF 48 SHEETS | STA. 48+00.00 TO STA. 48+00.00

F.A.U. RTE.	SECTION	COUNTY	TOTAL SHEETS	SHEET NO.
7448	09-00933-01-BR	MACON	572	412
		CONTRACT NO. XXXX(XXX)		
		ILLINOIS	FED. AID PROJECT	

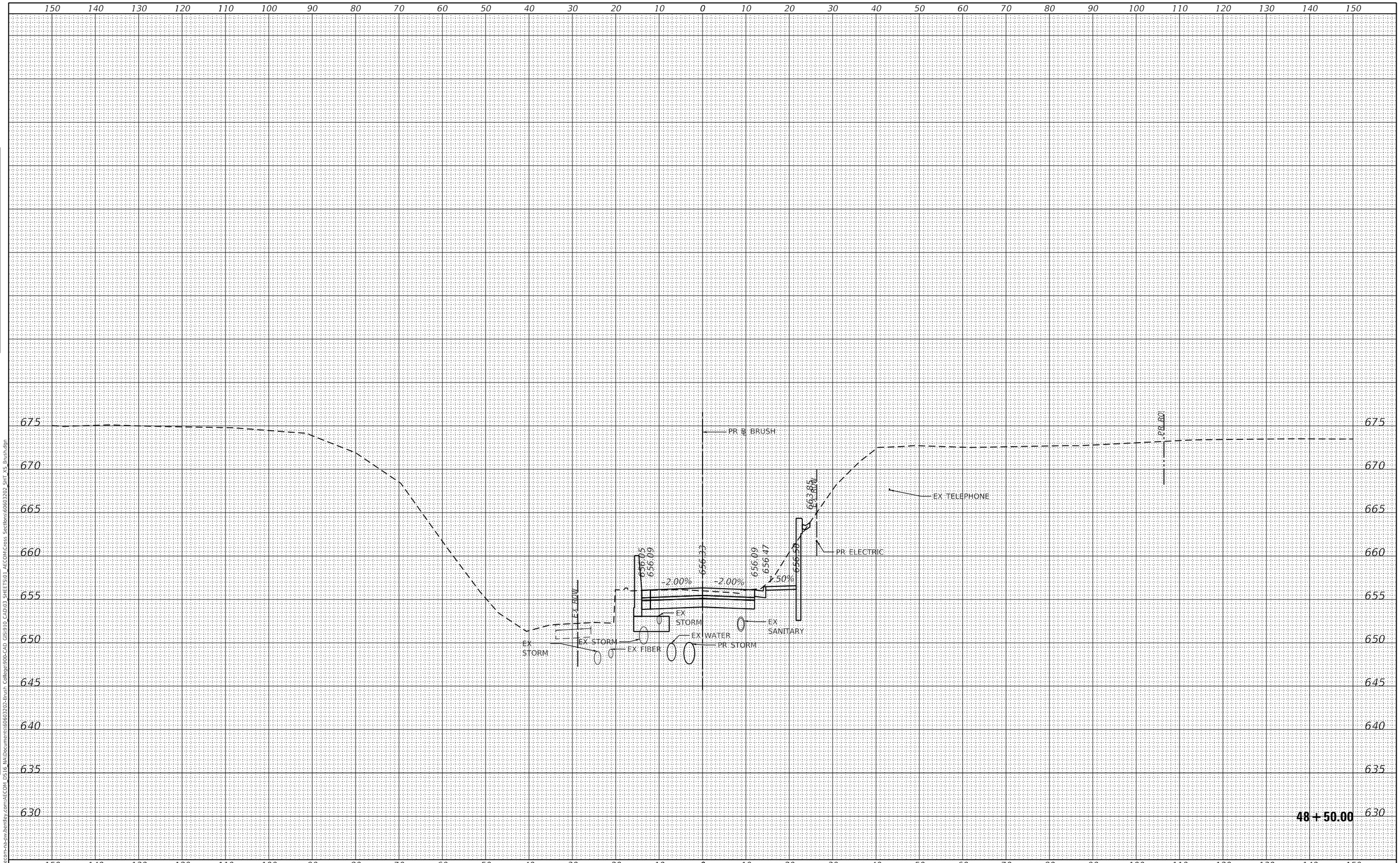

FINAL SURVEY	BY	DATE
SURVEYED		
PLOTTED		
TEMPLATE		
AREAS		
AREAS CHECKED		
NOTE BOOK		
NO.		

ORIGINAL SURVEY	BY	DATE
SURVEYED		
PLOTTED		
TEMPLATE		
AREAS		
AREAS CHECKED		
NOTE BOOK		
NO.		

MODEL: Default
FILE NAME: pw:\\aecom-na-pw.bentley.com:AECOM DS16 NA\Documents\60603202-Brush College\900-CAD GIS\910 CAD\03 SHEETS\01 AECOM\Cross Sections\60603202 SHT XS Brush.dgn

AECOM
345 EAST ASH AVENUE, SUITE B
DECATUR, IL 62526-6161
PHONE: (217) 875-4800 FAX: (217) 875-3577

USER NAME = meron.asnake	DESIGNED - LMB	REVISED -
	DRAWN - LMB	REVISED -
PLOT SCALE = 20.0000 ' / in.	CHECKED - WBS	REVISED -
PLOT DATE = 6/19/2020	DATE - 6/12/2020	REVISED -

STATE OF ILLINOIS
DEPARTMENT OF TRANSPORTATION

BRUSH COLLEGE ROAD
CROSS SECTIONS

SCALE: 1"=10H':5V' | SHEET 4 OF 48 SHEETS | STA. 48+50.00 TO STA. 48+50.00

F.A.U. RTE.	SECTION	COUNTY	TOTAL SHEETS	SHEET NO.
7448	09-00933-01-BR	MACON	572	413
		CONTRACT NO. XXXX(XXX)		
		ILLINOIS	FED. AID PROJECT	

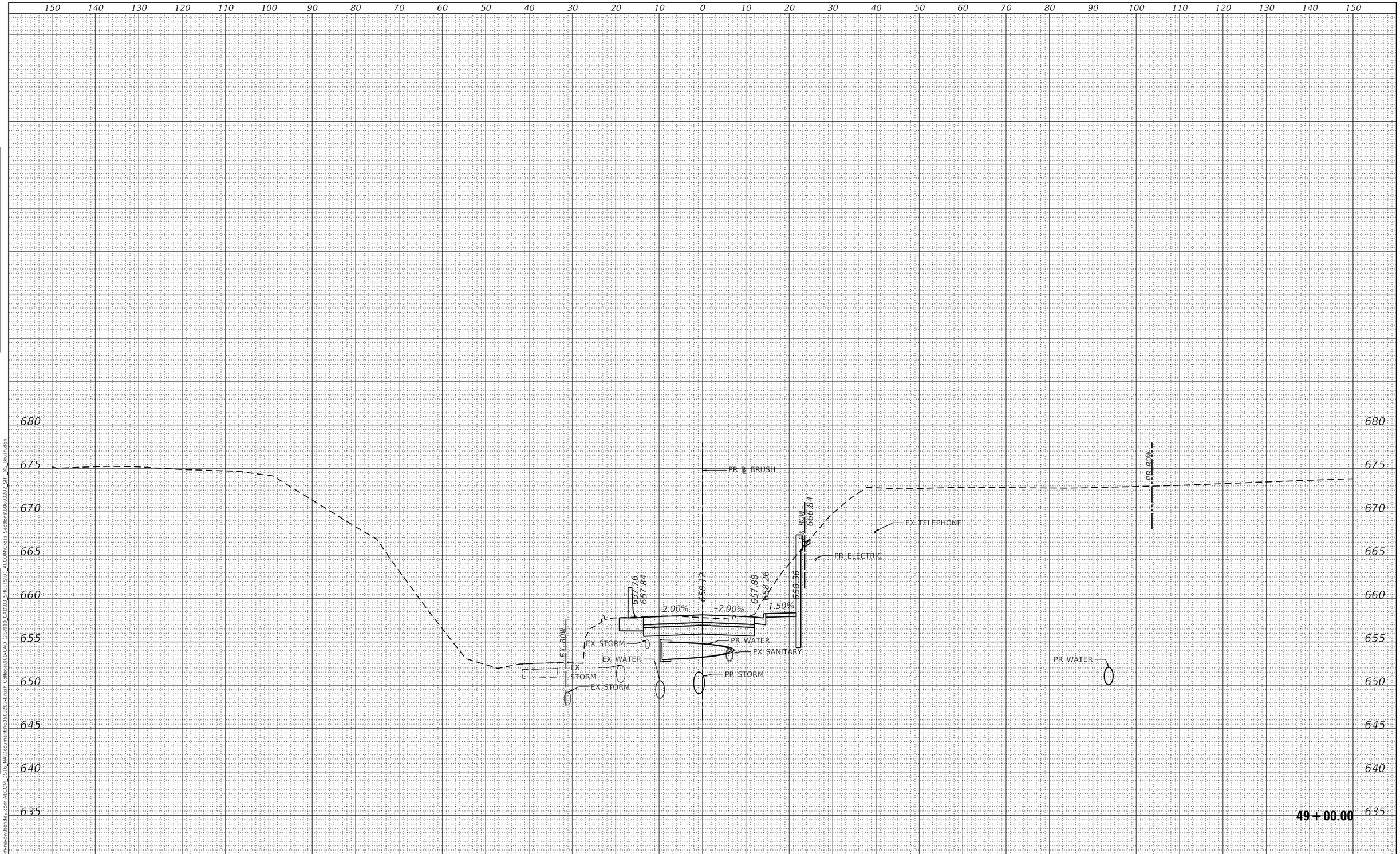

FINAL SURVEY		BY	DATE
NOTE BOOK	SURVEYED		
	PLOTTED		
	TEMPLATE		
	AREAS		
NO.	AREAS CHECKED		

ORIGINAL SURVEY		BY	DATE
NOTE BOOK	SURVEYED		
	PLOTTED		
	TEMPLATE		
	AREAS		
NO.	AREAS CHECKED		

MODEL: Default
FILE NAME: pw:\\aecom-na-pw.bentley.com:AECOM DS16 NA\Documents\60603202-Brush College\900-CAD GIS\910_CAD\03 SHEETS\01 AECOM\Cross Sections\60603202 SHT XS Brush.dgn

AECOM
345 EAST ASH AVENUE, SUITE B
DECATUR, IL 62526-6161
PHONE: (217) 875-8800 FAX: (217) 875-3577

USER NAME = meron.asnake	DESIGNED - LMB	REVISED -	
	DRAWN - LMB	REVISED -	
PLOT SCALE = 20.0000 ' / in.	CHECKED - WBS	REVISED -	
PLOT DATE = 6/19/2020	DATE - 6/12/2020	REVISED -	

STATE OF ILLINOIS
DEPARTMENT OF TRANSPORTATION

BRUSH COLLEGE ROAD
CROSS SECTIONS

SCALE: 1"=10H':5V' | SHEET 5 OF 48 SHEETS | STA. 49+00.00 TO STA. 49+00.00

F.A.U. RTE.	SECTION	COUNTY	TOTAL SHEETS	SHEET NO.
7448	09-00933-01-BR	MACON	572	414
		CONTRACT NO. XXXX(XXX)		
		ILLINOIS	FED. AID PROJECT	

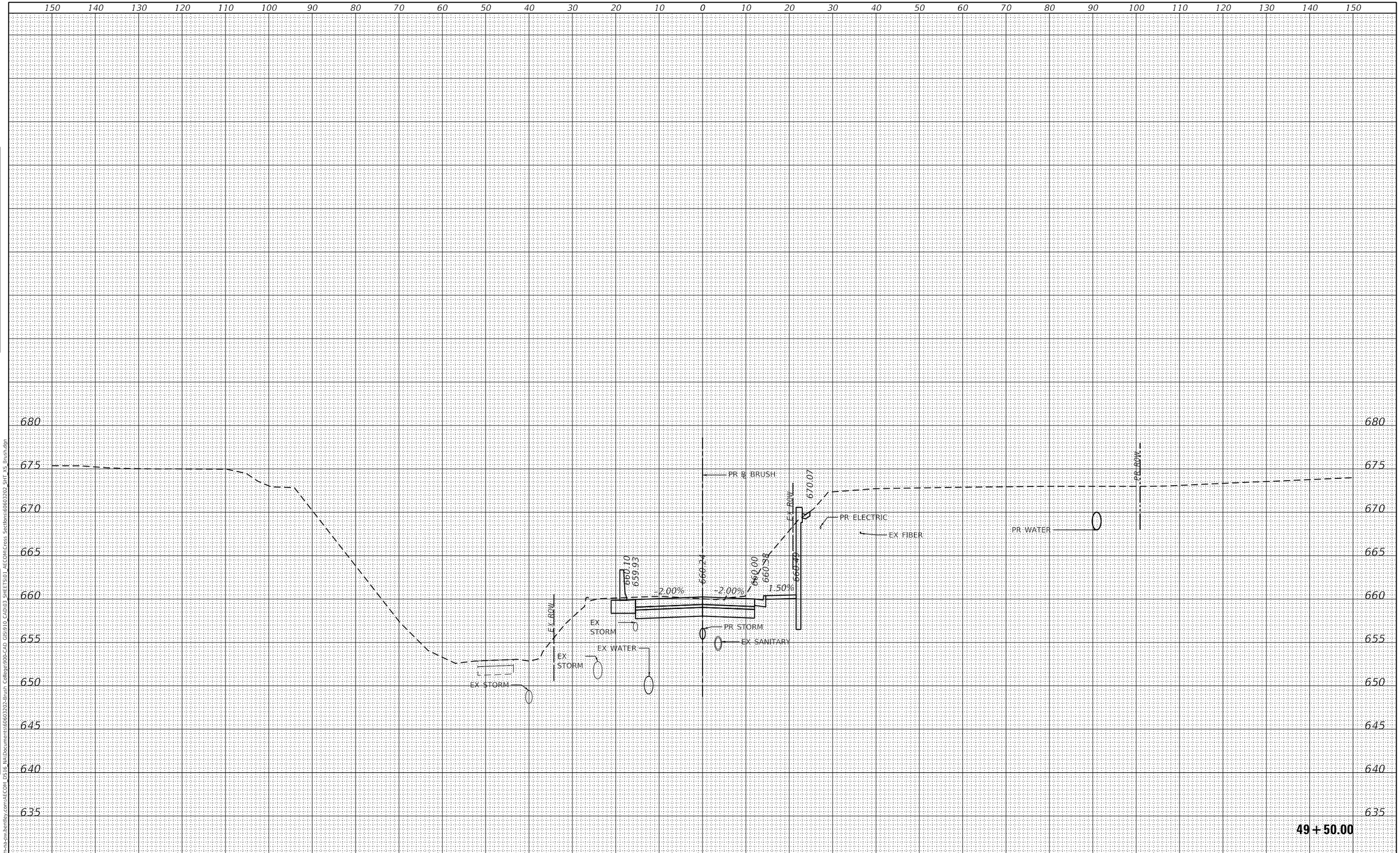

FINAL SURVEY		BY	DATE
	SURVEYED		
	PLOTTED		
NOTE BOOK	TEMPLATE		
	AREAS		
NO.	AREAS CHECKED		

ORIGINAL SURVEY		BY	DATE
	SURVEYED		
	PLOTTED		
NOTE BOOK	TEMPLATE		
	AREAS		
NO.	AREAS CHECKED		

MODEL: Default
FILE NAME: pw:\\aecom-na-pw.bentley.com:AECOM DS16 NA\Documents\60603202-Brush College\900-CAD GIS\01D_CAD\03 SHEETS\01 AECOM\Cross Sections\60603202 SHT XS Brush.dgn

AECOM
345 EAST ASH AVENUE, SUITE B
DECATUR, IL 62526-6161
PHONE: (217) 875-4800 FAX: (217) 875-3577

USER NAME = meron.asnake	DESIGNED - LMB	REVISED -	
	DRAWN - LMB	REVISED -	
PLOT SCALE = 20.0000 ' / in.	CHECKED - WBS	REVISED -	
PLOT DATE = 6/19/2020	DATE - 6/12/2020	REVISED -	

STATE OF ILLINOIS
DEPARTMENT OF TRANSPORTATION

BRUSH COLLEGE ROAD
CROSS SECTIONS

SCALE: 1"=10H':5V' | SHEET 6 OF 48 SHEETS | STA. 49+50.00 TO STA. 49+50.00

F.A.U. RTE.	SECTION	COUNTY	TOTAL SHEETS	SHEET NO.
7448	09-00933-01-BR	MACON	572	415
		CONTRACT NO. XXXX(XXX)		
		ILLINOIS	FED. AID PROJECT	

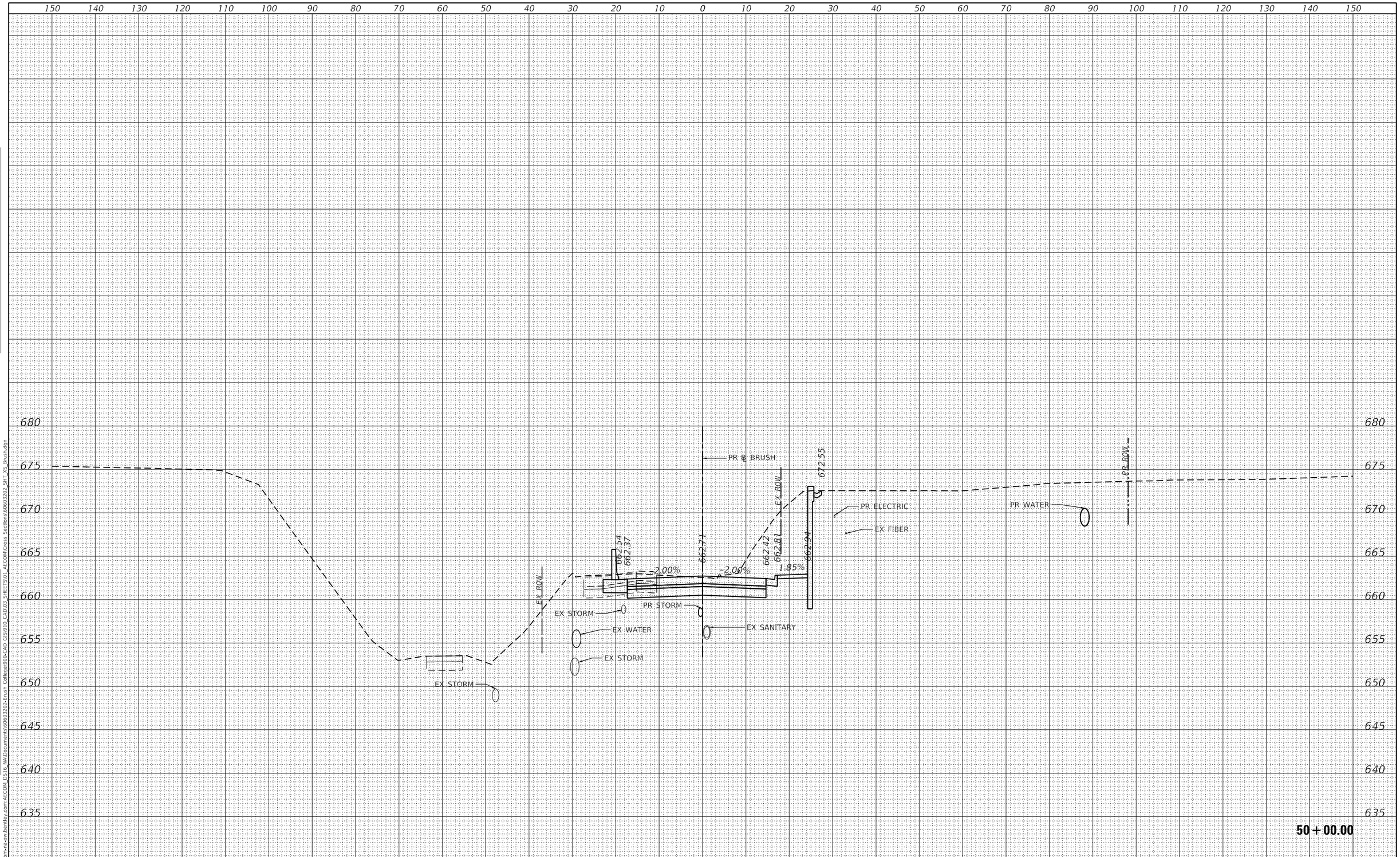

FINAL SURVEY		BY	DATE
NOTE BOOK	SURVEYED		
	PLOTTED		
	TEMPLATE		
	AREAS		
	AREAS CHECKED		
NO.			

ORIGINAL SURVEY		BY	DATE
NOTE BOOK	SURVEYED		
	PLOTTED		
	TEMPLATE		
	AREAS		
	AREAS CHECKED		
NO.			

MODEL: Default
FILE NAME: pw:\\aecom-na-pw.bentley.com:AECOM DS16 NA\Documents\60603202-Brush College\900-CAD GIS\910 CAD\03 SHEETS\01 AECOM\Cross Sections\60603202_SHT XS Brush.dgn

AECOM
345 EAST ASH AVENUE, SUITE B
DECATUR, IL 62526-6161
PHONE: (217) 875-4800 FAX: (217) 875-3577

USER NAME = meron.asnake	DESIGNED - LMB	REVISED -
	DRAWN - LMB	REVISED -
PLOT SCALE = 20.0000 ' / in.	CHECKED - WBS	REVISED -
PLOT DATE = 6/19/2020	DATE - 6/12/2020	REVISED -

STATE OF ILLINOIS
DEPARTMENT OF TRANSPORTATION

BRUSH COLLEGE ROAD
CROSS SECTIONS

SCALE: 1"=10H':5V' | SHEET 7 OF 48 SHEETS | STA. 50+00.00 TO STA. 50+00.00

F.A.U. RTE.	SECTION	COUNTY	TOTAL SHEETS	SHEET NO.
7448	09-00933-01-BR	MACON	572	416
		CONTRACT NO. XXXX(XXX)		
		ILLINOIS	FED. AID PROJECT	

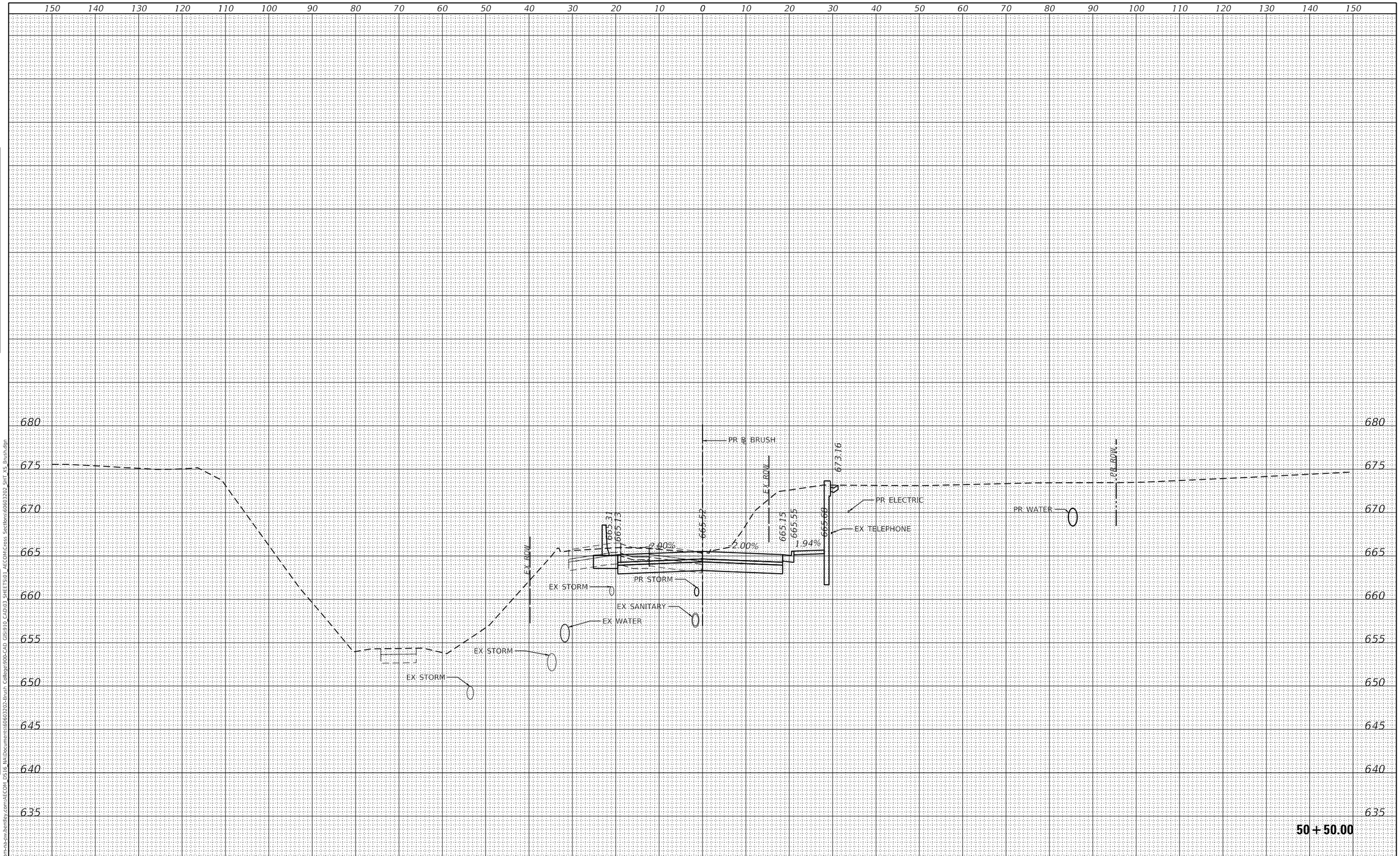

FINAL SURVEY		BY	DATE
	SURVEYED		
	PLOTTED		
NOTE BOOK	TEMPLATE		
	AREAS		
NO.	AREAS CHECKED		

ORIGINAL SURVEY		BY	DATE
	SURVEYED		
	PLOTTED		
NOTE BOOK	TEMPLATE		
	AREAS		
NO.	AREAS CHECKED		

MODEL: Default
FILE NAME: pw:\\aecom-na-pw.bentley.com:AECOM DS16_NA\documents\60603202-Brush College90b-CAD GIS\910 CAD\03 SHEETS\01 AECOM\Cross Sections\60603202 SHT XS Brush.dgn

AECOM
345 EAST ASH AVENUE, SUITE B
DECATUR, IL 62526-6161
PHONE: (217) 875-4800 FAX: (217) 875-3577

USER NAME = meron.asnake	DESIGNED - LMB	REVISED -
	DRAWN - LMB	REVISED -
PLOT SCALE = 20.0000 ' / in.	CHECKED - WBS	REVISED -
PLOT DATE = 6/19/2020	DATE - 6/19/2020	REVISED -

STATE OF ILLINOIS
DEPARTMENT OF TRANSPORTATION

BRUSH COLLEGE ROAD
CROSS SECTIONS

SCALE: 1"=10H':5V' | SHEET 8 OF 48 SHEETS | STA. 50+50.00 TO STA. 50+50.00

F.A.U. RTE.	SECTION	COUNTY	TOTAL SHEETS	SHEET NO.
7448	09-00933-01-BR	MACON	572	417
		CONTRACT NO. XXXX(XXX)		
		ILLINOIS	FED. AID PROJECT	

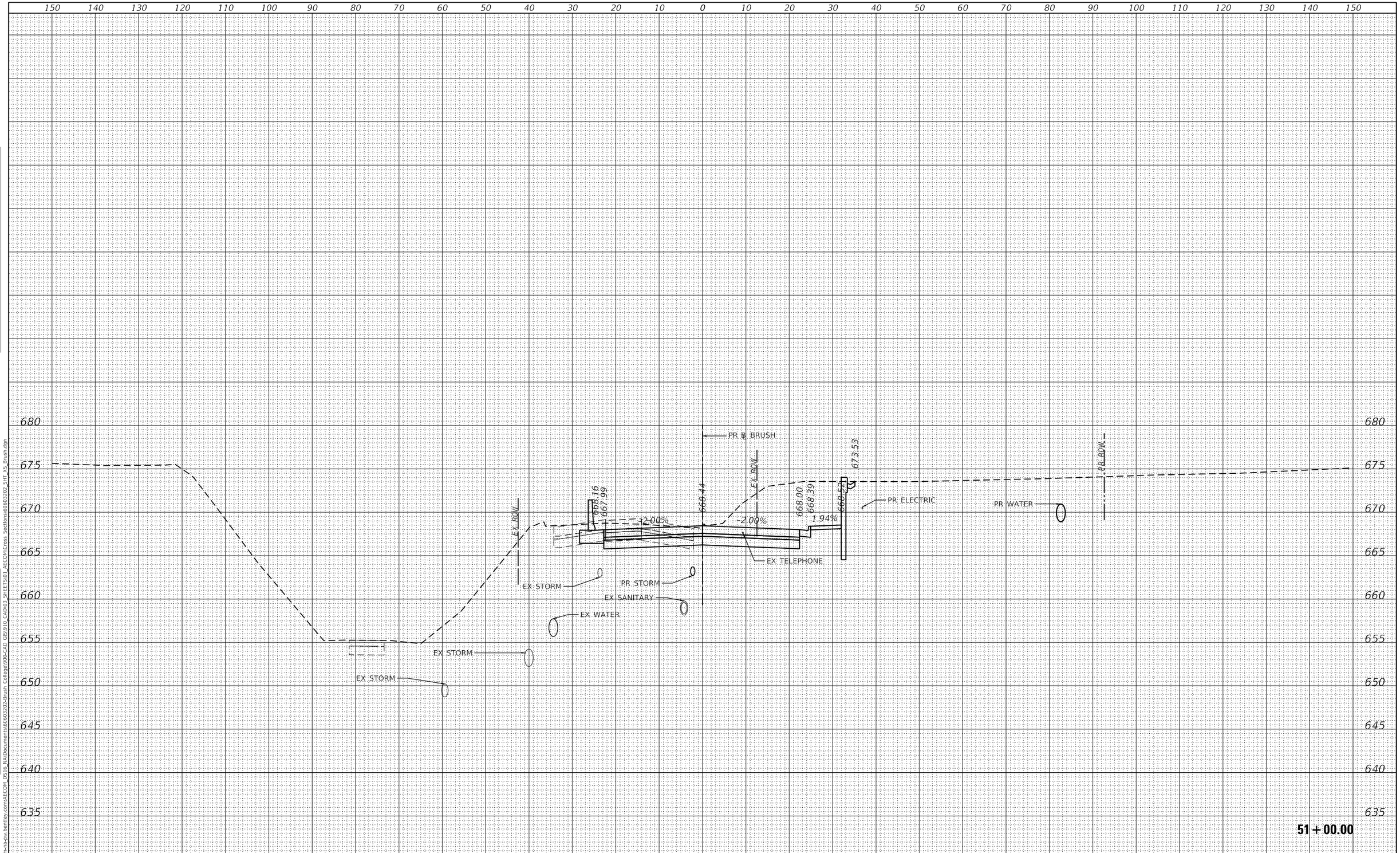

FINAL SURVEY		BY	DATE
NOTE BOOK	SURVEYED		
	PLOTTED		
	TEMPLATE		
	AREAS		
NO.	AREAS CHECKED		

ORIGINAL SURVEY		BY	DATE
NOTE BOOK	SURVEYED		
	PLOTTED		
	TEMPLATE		
	AREAS		
NO.	AREAS CHECKED		

MODEL: Default
FILE NAME: pw:\\aecom-na-pw.bentley.com:AECOM DS16 NA\Documents\60603202-Brush College\900-CAD GIS\910_CAD\03 SHEETS\01 AECOM\Cross Sections\60603202 SHT XS Brush.dgn

AECOM
345 EAST ASH AVENUE, SUITE B
DECATUR, IL 62526-6161
PHONE: (217) 875-6800 FAX: (217) 875-3577

USER NAME = meron.asnake	DESIGNED - LMB	REVISED -	
	DRAWN - LMB	REVISED -	
PLOT SCALE = 20.0000 ' / in.	CHECKED - WBS	REVISED -	
PLOT DATE = 6/19/2020	DATE - 6/12/2020	REVISED -	

STATE OF ILLINOIS
DEPARTMENT OF TRANSPORTATION

BRUSH COLLEGE ROAD
CROSS SECTIONS

SCALE: 1"=10H':5V' | SHEET 9 OF 48 SHEETS | STA. 51+00.00 TO STA. 51+00.00

F.A.U. RTE.	SECTION	COUNTY	TOTAL SHEETS	SHEET NO.
7448	09-00933-01-BR	MACON	572	418
		CONTRACT NO. XXXX(XXX)		
		ILLINOIS	FED. AID PROJECT	