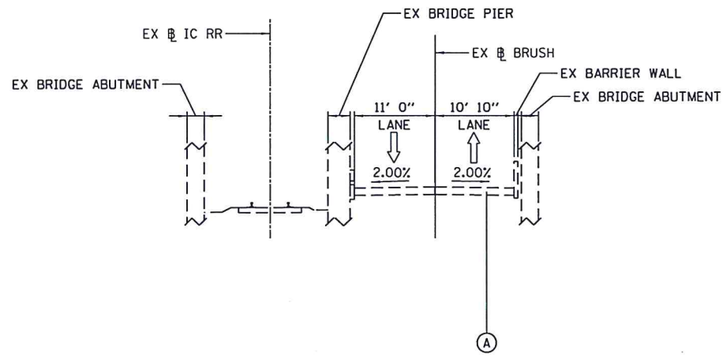

EXISTING BRUSH COLLEGE ROAD

LOOKING NORTH

PR ℄ BRUSH COLLEGE ROAD STA 45+00.00 TO STA 47+00.00

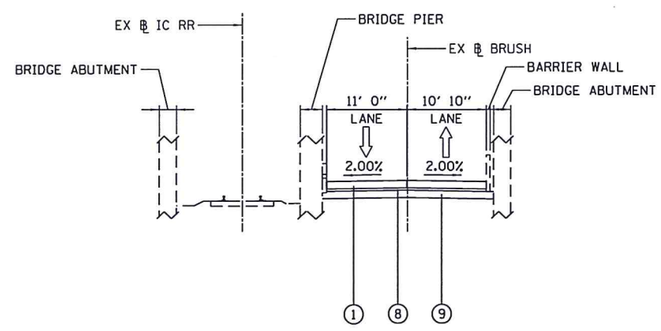

PROPOSED BRUSH COLLEGE ROAD

LOOKING NORTH

PR ℄ BRUSH COLLEGE ROAD STA 45+00.00 TO STA 47+00.00

NOTE: EXISTING BRIDGE STRUCTURE ENDS AT STA 45+00.00

EXISTING LEGEND

- (A) EXISTING CONCRETE PAVEMENT, VARIES 10" TO 12"
- (B) EXISTING ASPHALT TREATED OPEN-GRADED DRAINAGE LAYER, 4"
- (C) EXISTING GEOTECHNICAL FABRIC
- (D) EXISTING STEEL PLATE BEAM GUARD RAIL
- (E) EXISTING COMBINATION CONCRETE CURB AND GUTTER, TYPE B-6.24
- (F) EXISTING COMBINATION CONCRETE CURB AND GUTTER, TYPE M-6.06
- (G) EXISTING CORRUGATED MEDIAN
- (H) EXISTING CONCRETE BARRIER WALL
- (I) EXISTING TIE BAR
- (J) EXISTING CONCRETE MEDIAN SURFACE
- (K) EXISTING PIPE UNDERDRAINS, 4"
- (L) EXISTING STEEL SHEET PILING
- (M) EXISTING SIDEWALK

PROPOSED LEGEND

- (1) PROPOSED PAVEMENT
- (2) PROPOSED COMBINATION CONCRETE CURB AND GUTTER, TYPE B-6.24
- (3) PROPOSED COMBINATION CONCRETE CURB AND GUTTER, TYPE M-6.06
- (4) PROPOSED CONCRETE BARRIER WALL
- (5) PROPOSED MSE RETAINING WALL
- (6) PROPOSED CONCRETE MEDIAN SURFACE
- (7) PROPOSED SIDEWALK
- (8) PROPOSED STABILIZED GRANULAR MATERIAL SUBBASE, 4"
- (9) AGGREGATE BASE COURSE
- (10) PROPOSED TIE BAR

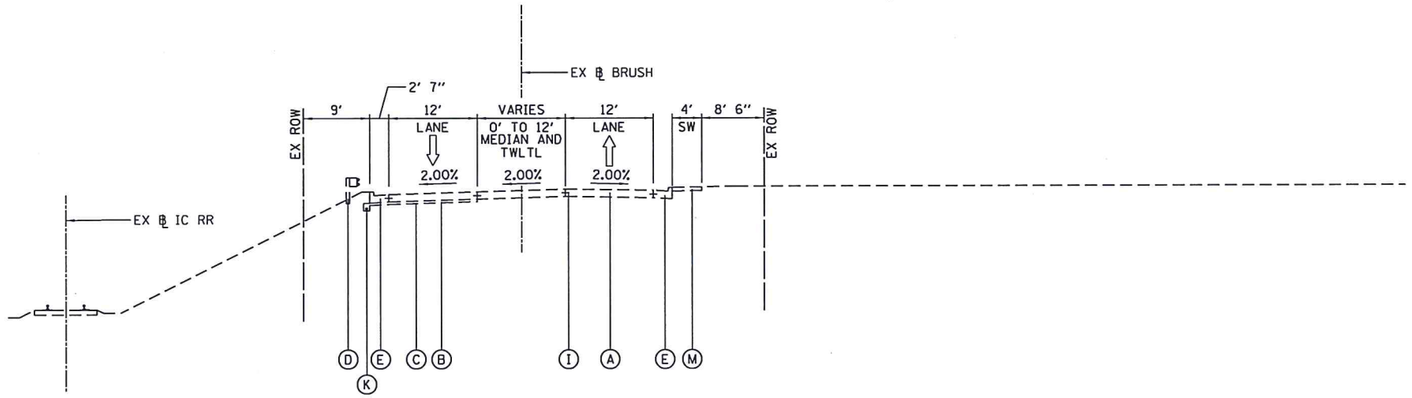

EXISTING BRUSH COLLEGE ROAD

LOOKING NORTH

PR ℄ BRUSH COLLEGE ROAD STA 47+00.00 TO STA 50+00.00

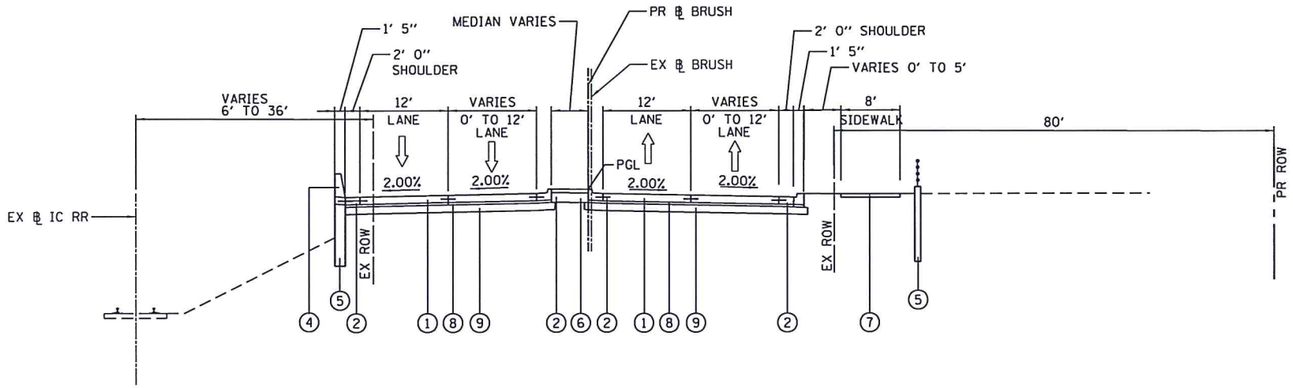

PROPOSED BRUSH COLLEGE ROAD

LOOKING NORTH

PR ℄ BRUSH COLLEGE ROAD STA 47+00.00 TO STA 50+00.00

EXISTING LEGEND

- (A) EXISTING CONCRETE PAVEMENT, VARIES 10" TO 12"
- (B) EXISTING ASPHALT TREATED OPEN-GRADED DRAINAGE LAYER, 4"
- (C) EXISTING GEOTECHNICAL FABRIC
- (D) EXISTING STEEL PLATE BEAM GUARD RAIL
- (E) EXISTING COMBINATION CONCRETE CURB AND GUTTER, TYPE B-6.24
- (F) EXISTING COMBINATION CONCRETE CURB AND GUTTER, TYPE M-6.06
- (G) EXISTING CORRUGATED MEDIAN
- (H) EXISTING CONCRETE BARRIER WALL
- (I) EXISTING TIE BAR
- (J) EXISTING CONCRETE MEDIAN SURFACE
- (K) EXISTING PIPE UNDERDRAINS, 4"
- (L) EXISTING STEEL SHEET PILING
- (M) EXISTING SIDEWALK

PROPOSED LEGEND

- (1) PROPOSED PAVEMENT
- (2) PROPOSED COMBINATION CONCRETE CURB AND GUTTER, TYPE B-6.24
- (3) PROPOSED COMBINATION CONCRETE CURB AND GUTTER, TYPE M-6.06
- (4) PROPOSED CONCRETE BARRIER WALL
- (5) PROPOSED MSE RETAINING WALL
- (6) PROPOSED CONCRETE MEDIAN SURFACE
- (7) PROPOSED SIDEWALK
- (8) PROPOSED STABILIZED GRANULAR MATERIAL SUBBASE, 4"
- (9) AGGREGATE BASE COURSE
- (10) PROPOSED TIE BAR

FILE NAME 60603202_Typical Sections-02.BCR.dgn

AECOM
303 EAST WACKER DRIVE, SUITE 1400
CHICAGO, IL 60601-5276
PHONE: (312) 373-7700 FAX: (312) 373-6800

USER NAME = SearsB	DESIGNED - LMB	REVISED -	
	DRAWN - LMB	REVISED -	
PLOT SCALE = 20.0000 ' / in.	CHECKED - WBS	REVISED -	
PLOT DATE = 8/30/2019	DATE - 8/30/19	REVISED -	

STATE OF ILLINOIS
DEPARTMENT OF TRANSPORTATION

BRUSH COLLEGE ROAD
TYPICAL SECTIONS

SCALE: 1"=10' | SHEET 2 OF 32 SHEETS | STA. 47+00.00 TO STA. 50+00.00

F.A.U. RTE.	SECTION	COUNTY	TOTAL SHEETS	SHEET NO.
7448	09-00933-01-BR	MACON	74	3
		CONTRACT NO. 6WGY(165)		
	ILLINOIS	FED. AID PROJECT		

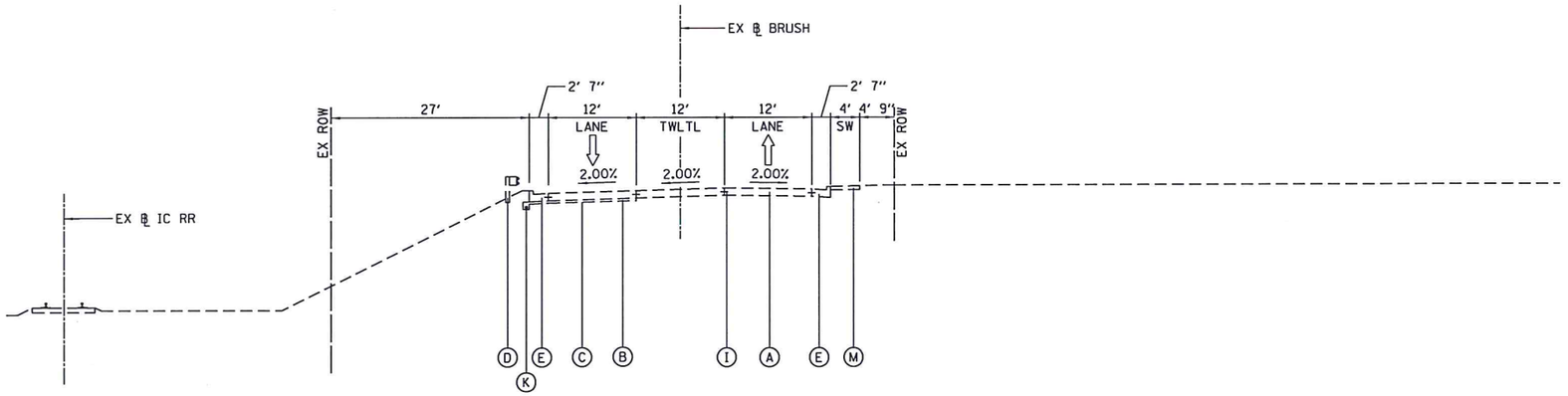

EXISTING BRUSH COLLEGE ROAD

LOOKING NORTH

PR ℄ BRUSH COLLEGE ROAD STA 50+00.00 TO STA 52+00.00

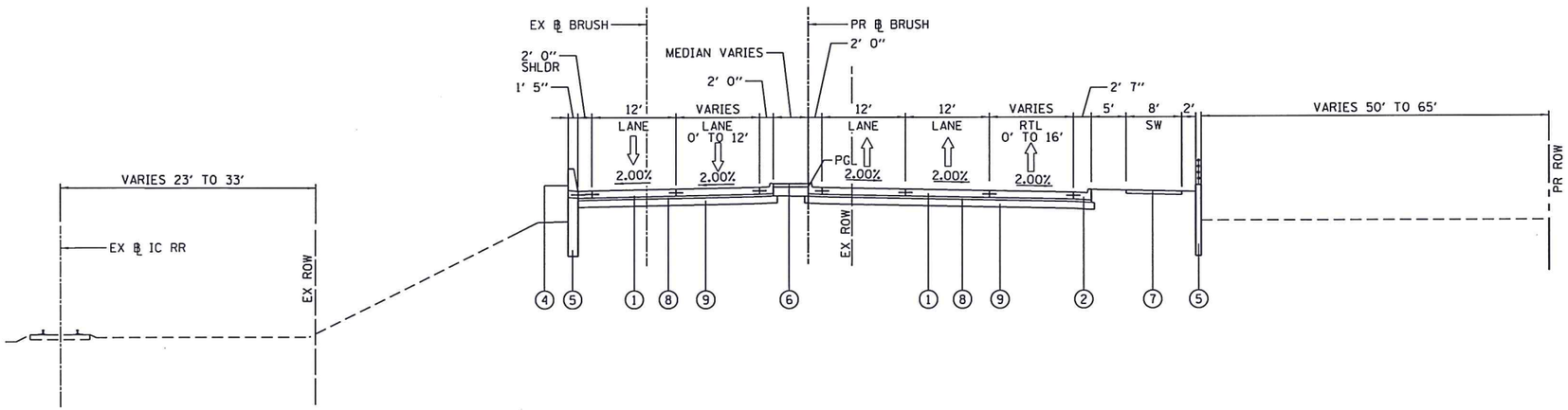

PROPOSED BRUSH COLLEGE ROAD

LOOKING NORTH

PR ℄ BRUSH COLLEGE ROAD STA 50+00.00 TO STA 52+00.00

EXISTING LEGEND

- (A) EXISTING CONCRETE PAVEMENT, VARIES 10" TO 12"
- (B) EXISTING ASPHALT TREATED OPEN-GRADED DRAINAGE LAYER, 4"
- (C) EXISTING GEOTECHNICAL FABRIC
- (D) EXISTING STEEL PLATE BEAM GUARD RAIL
- (E) EXISTING COMBINATION CONCRETE CURB AND GUTTER, TYPE B-6.24
- (F) EXISTING COMBINATION CONCRETE CURB AND GUTTER, TYPE M-6.06
- (G) EXISTING CORRUGATED MEDIAN
- (H) EXISTING CONCRETE BARRIER WALL
- (I) EXISTING TIE BAR
- (J) EXISTING CONCRETE MEDIAN SURFACE
- (K) EXISTING PIPE UNDERDRAINS, 4"
- (L) EXISTING STEEL SHEET PILING
- (M) EXISTING SIDEWALK

PROPOSED LEGEND

- (1) PROPOSED PAVEMENT
- (2) PROPOSED COMBINATION CONCRETE CURB AND GUTTER, TYPE B-6.24
- (3) PROPOSED COMBINATION CONCRETE CURB AND GUTTER, TYPE M-6.06
- (4) PROPOSED CONCRETE BARRIER WALL
- (5) PROPOSED MSE RETAINING WALL
- (6) PROPOSED CONCRETE MEDIAN SURFACE
- (7) PROPOSED SIDEWALK
- (8) PROPOSED STABILIZED GRANULAR MATERIAL SUBBASE, 4"
- (9) AGGREGATE BASE COURSE
- (10) PROPOSED TIE BAR

FILE NAME 60603202_Typical Sections-03.BCR.dgn

AECOM
303 EAST WACKER DRIVE, SUITE 1400
CHICAGO, IL 60601-5276
PHONE: (312) 373-7700 FAX: (312) 373-6800

USER NAME = SearsB	DESIGNED - LMB	REVISED -	
	DRAWN - LMB	REVISED -	
PLOT SCALE = 20.0000 ' / in.	CHECKED - WBS	REVISED -	
PLOT DATE = 8/30/2019	DATE - 8/30/19	REVISED -	

STATE OF ILLINOIS
DEPARTMENT OF TRANSPORTATION

BRUSH COLLEGE ROAD
TYPICAL SECTIONS

SCALE: 1"=10' | SHEET 3 OF 32 SHEETS | STA. 50+00.00 TO STA. 52+00.00

F.A.U. RTE.	SECTION	COUNTY	TOTAL SHEETS	SHEET NO.
7448	09-00933-01-BR	MACON	74	4
		CONTRACT NO. 6WGY(165)		
	ILLINOIS	FED. AID PROJECT		

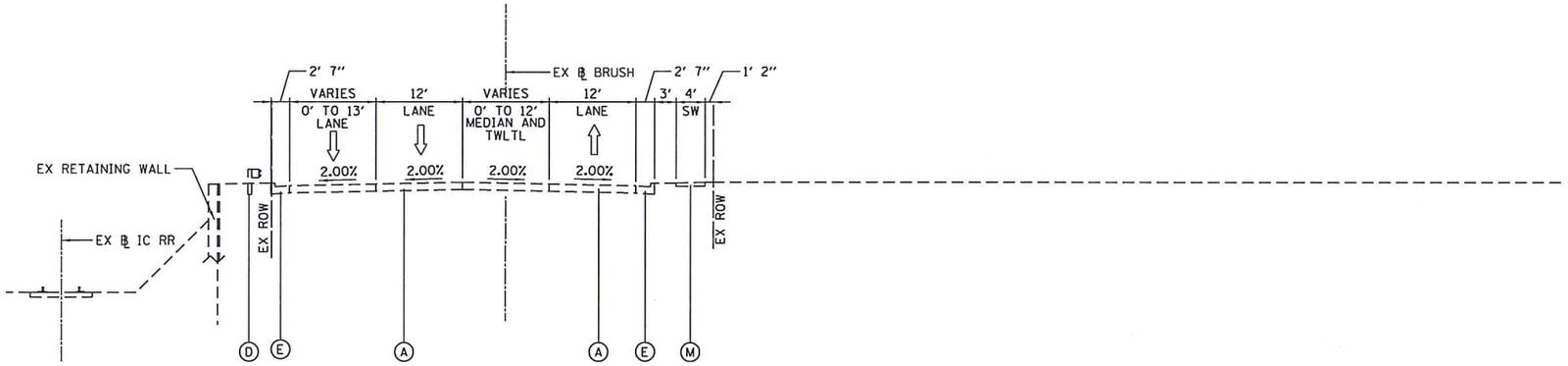

EXISTING BRUSH COLLEGE ROAD

LOOKING NORTH

PR ℄ BRUSH COLLEGE ROAD STA 52+00.00 TO STA 55+00.00

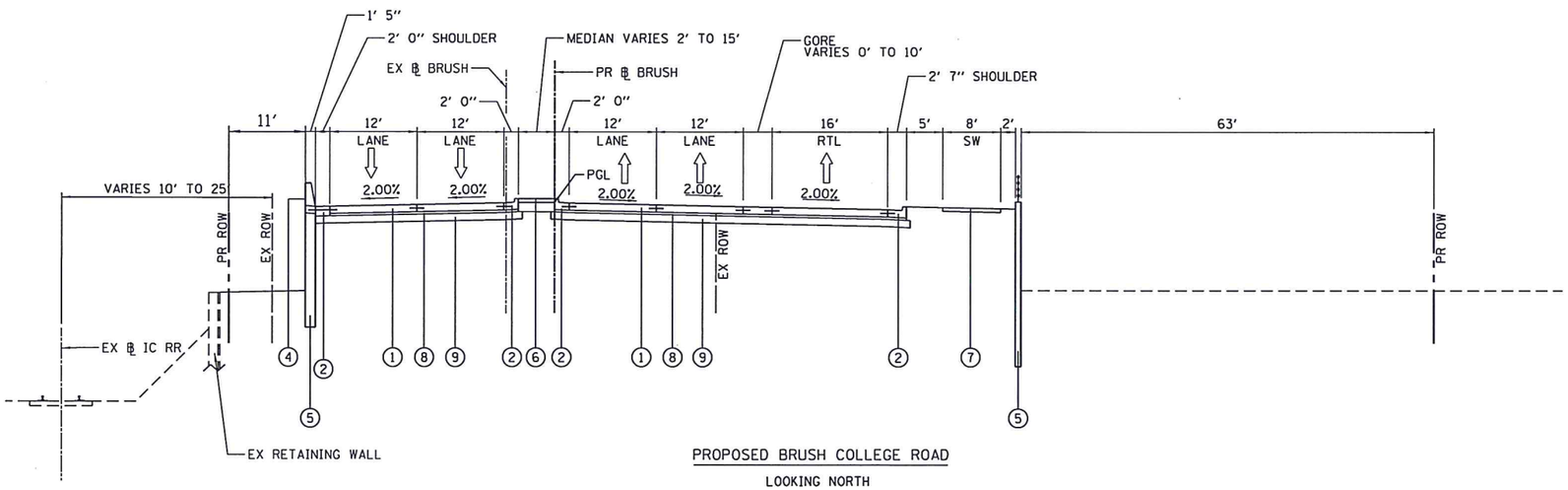

PROPOSED BRUSH COLLEGE ROAD

LOOKING NORTH

PR ℄ BRUSH COLLEGE ROAD STA 52+00.00 TO STA 55+00.00

EXISTING LEGEND

- (A) EXISTING CONCRETE PAVEMENT, VARIES 10" TO 12"
- (B) EXISTING ASPHALT TREATED OPEN-GRADED DRAINAGE LAYER, 4"
- (C) EXISTING GEOTECHNICAL FABRIC
- (D) EXISTING STEEL PLATE BEAM GUARD RAIL
- (E) EXISTING COMBINATION CONCRETE CURB AND GUTTER, TYPE B-6.24
- (F) EXISTING COMBINATION CONCRETE CURB AND GUTTER, TYPE M-6.06
- (G) EXISTING CORRUGATED MEDIAN
- (H) EXISTING CONCRETE BARRIER WALL
- (I) EXISTING TIE BAR
- (J) EXISTING CONCRETE MEDIAN SURFACE
- (K) EXISTING PIPE UNDERDRAINS, 4"
- (L) EXISTING STEEL SHEET PILING
- (M) EXISTING SIDEWALK

PROPOSED LEGEND

- (1) PROPOSED PAVEMENT
- (2) PROPOSED COMBINATION CONCRETE CURB AND GUTTER, TYPE B-6.24
- (3) PROPOSED COMBINATION CONCRETE CURB AND GUTTER, TYPE M-6.06
- (4) PROPOSED CONCRETE BARRIER WALL
- (5) PROPOSED MSE RETAINING WALL
- (6) PROPOSED CONCRETE MEDIAN SURFACE
- (7) PROPOSED SIDEWALK
- (8) PROPOSED STABILIZED GRANULAR MATERIAL SUBBASE, 4"
- (9) AGGREGATE BASE COURSE
- (10) PROPOSED TIE BAR

FILE NAME 68683282_Typical Sections-B4_BCR.dgn

AECOM
303 EAST WACKER DRIVE, SUITE 1400
CHICAGO, IL 60601-5276
PHONE: (312) 373-7700 FAX: (312) 373-6800

USER NAME = SearsB	DESIGNED - LMB	REVISED -	
	DRAWN - LMB	REVISED -	
PLOT SCALE = 20.0000 ' / in.	CHECKED - WBS	REVISED -	
PLOT DATE = 8/30/2019	DATE - 8/30/19	REVISED -	

STATE OF ILLINOIS
DEPARTMENT OF TRANSPORTATION

BRUSH COLLEGE ROAD
TYPICAL SECTIONS

SCALE: 1"=10' | SHEET 4 OF 32 SHEETS | STA. 52+00.00 TO STA. 55+00.00

F.A.U. RTE.	SECTION	COUNTY	TOTAL SHEETS	SHEET NO.
7448	09-00933-01-BR	MACON	74	5
		CONTRACT NO. 6WGY(165)		
	ILLINOIS	FED. AID PROJECT		

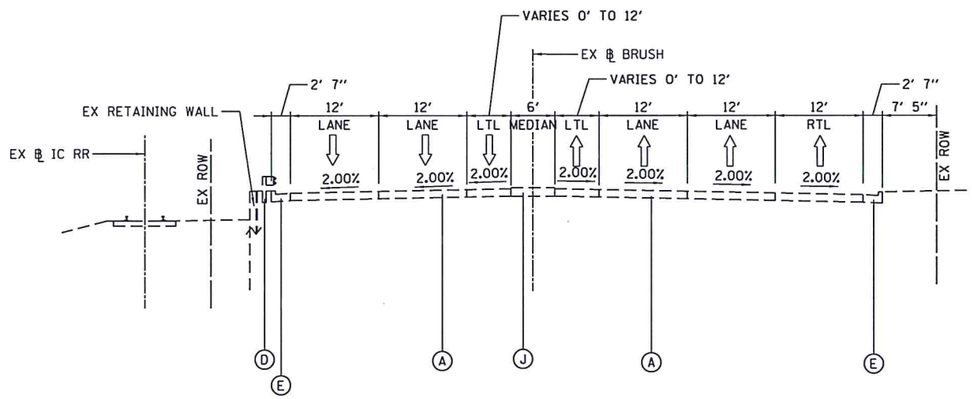

EXISTING BRUSH COLLEGE ROAD

LOOKING NORTH

PR ℄ BRUSH COLLEGE ROAD STA 55+00.00 TO STA 58+00.00

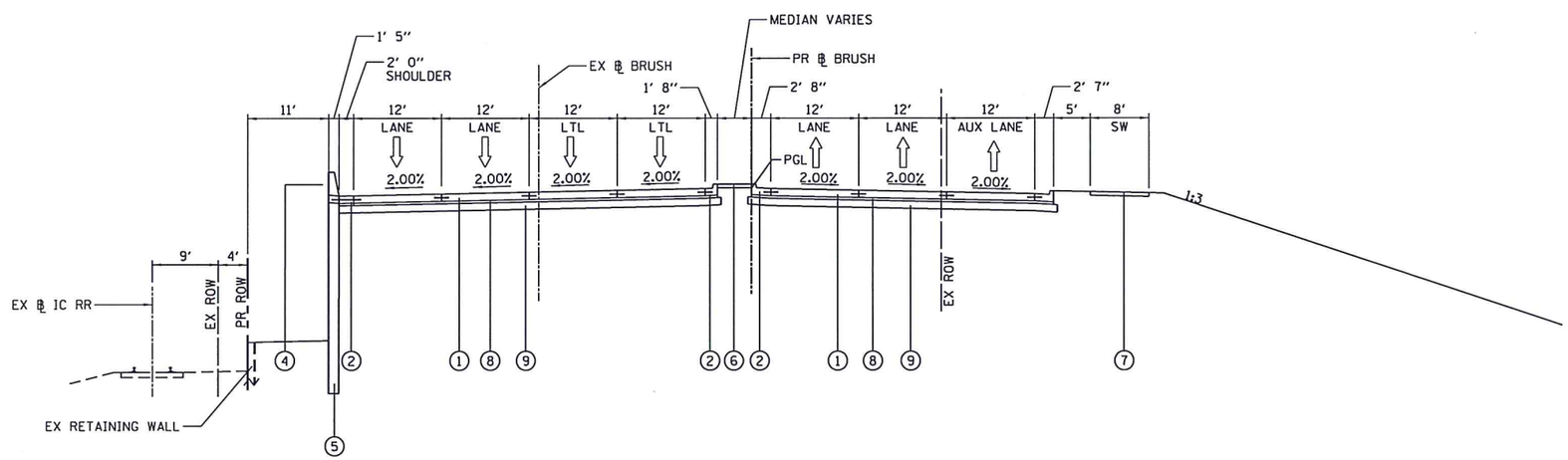

PROPOSED BRUSH COLLEGE ROAD

LOOKING NORTH

PR ℄ BRUSH COLLEGE ROAD STA 55+00.00 TO STA 58+00.00

EXISTING LEGEND

- (A) EXISTING CONCRETE PAVEMENT, VARIES 10" TO 12"
- (B) EXISTING ASPHALT TREATED OPEN-GRADED DRAINAGE LAYER, 4"
- (C) EXISTING GEOTECHNICAL FABRIC
- (D) EXISTING STEEL PLATE BEAM GUARD RAIL
- (E) EXISTING COMBINATION CONCRETE CURB AND GUTTER, TYPE B-6.24
- (F) EXISTING COMBINATION CONCRETE CURB AND GUTTER, TYPE M-6.06
- (G) EXISTING CORRUGATED MEDIAN
- (H) EXISTING CONCRETE BARRIER WALL
- (I) EXISTING TIE BAR
- (J) EXISTING CONCRETE MEDIAN SURFACE
- (K) EXISTING PIPE UNDERDRAINS, 4"
- (L) EXISTING STEEL SHEET PILING
- (M) EXISTING SIDEWALK

PROPOSED LEGEND

- (1) PROPOSED PAVEMENT
- (2) PROPOSED COMBINATION CONCRETE CURB AND GUTTER, TYPE B-6.24
- (3) PROPOSED COMBINATION CONCRETE CURB AND GUTTER, TYPE M-6.06
- (4) PROPOSED CONCRETE BARRIER WALL
- (5) PROPOSED MSE RETAINING WALL
- (6) PROPOSED CONCRETE MEDIAN SURFACE
- (7) PROPOSED SIDEWALK
- (8) PROPOSED STABILIZED GRANULAR MATERIAL SUBBASE, 4"
- (9) AGGREGATE BASE COURSE
- (10) PROPOSED TIE BAR

FILE NAME 68603202_Typical Sections-BS_BCR.dgn

AECOM
303 EAST WACKER DRIVE, SUITE 1400
CHICAGO, IL 60601-5276
PHONE: (312) 373-7700 FAX: (312) 373-6800

USER NAME = SearsB	DESIGNED - LMB	REVISED -	STATE OF ILLINOIS DEPARTMENT OF TRANSPORTATION
	DRAWN - LMB	REVISED -	
PLOT SCALE = 20.0000 ' / in.	CHECKED - WBS	REVISED -	
PLOT DATE = 8/30/2019	DATE - 8/30/19	REVISED -	

BRUSH COLLEGE ROAD
TYPICAL SECTIONS

SCALE: 1"=10' | SHEET 5 OF 32 SHEETS | STA. 55+00.00 TO STA. 58+00.00

F.A.U. RTE.	SECTION	COUNTY	TOTAL SHEETS	SHEET NO.
7448	09-00933-01-BR	MACON	74	6
		CONTRACT NO. 6WGY(165)		
		ILLINOIS FED. AID PROJECT		

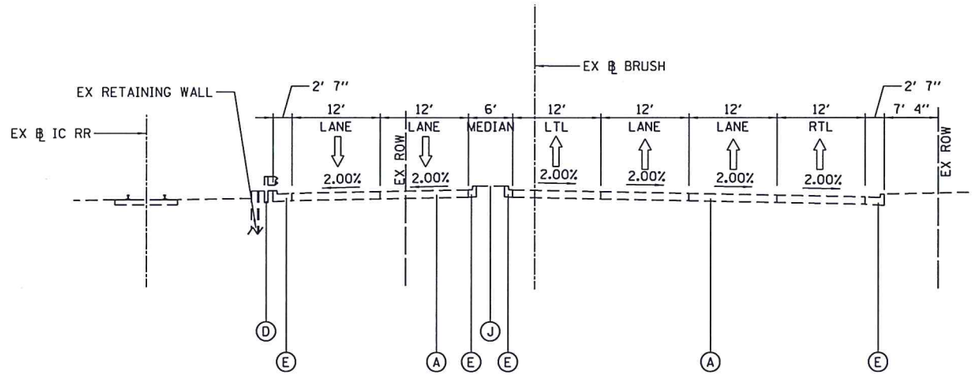

EXISTING BRUSH COLLEGE ROAD

LOOKING NORTH

PR ℄ BRUSH COLLEGE ROAD STA 58+00.00 TO STA 60+50.33

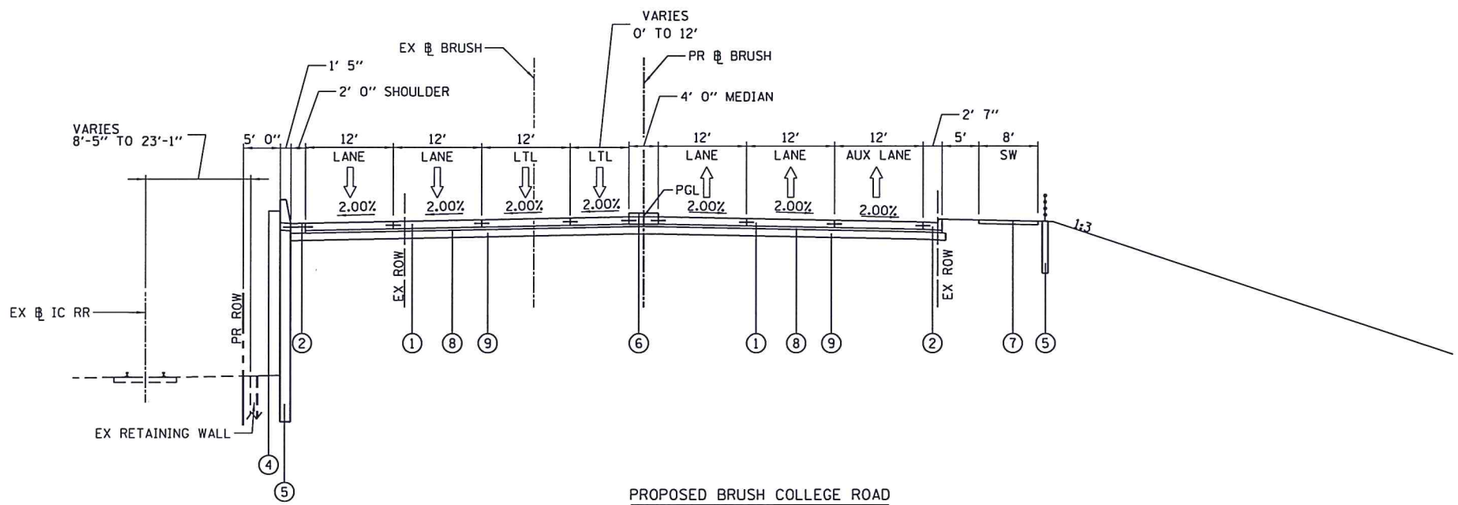

PROPOSED BRUSH COLLEGE ROAD

LOOKING NORTH

PR ℄ BRUSH COLLEGE ROAD STA 58+00.00 TO STA 60+50.33

RIGHT PR MSE RETAINING WALL STA 59+50.11 TO 60+47.18

EXISTING LEGEND

- (A) EXISTING CONCRETE PAVEMENT, VARIES 10" TO 12"
- (B) EXISTING ASPHALT TREATED OPEN-GRADED DRAINAGE LAYER, 4"
- (C) EXISTING GEOTECHNICAL FABRIC
- (D) EXISTING STEEL PLATE BEAM GUARD RAIL
- (E) EXISTING COMBINATION CONCRETE CURB AND GUTTER, TYPE B-6.24
- (F) EXISTING COMBINATION CONCRETE CURB AND GUTTER, TYPE M-6.06
- (G) EXISTING CORRUGATED MEDIAN
- (H) EXISTING CONCRETE BARRIER WALL
- (I) EXISTING TIE BAR
- (J) EXISTING CONCRETE MEDIAN SURFACE
- (K) EXISTING PIPE UNDERDRAINS, 4"
- (L) EXISTING STEEL SHEET PILING
- (M) EXISTING SIDEWALK

PROPOSED LEGEND

- (1) PROPOSED PAVEMENT
- (2) PROPOSED COMBINATION CONCRETE CURB AND GUTTER, TYPE B-6.24
- (3) PROPOSED COMBINATION CONCRETE CURB AND GUTTER, TYPE M-6.06
- (4) PROPOSED CONCRETE BARRIER WALL
- (5) PROPOSED MSE RETAINING WALL
- (6) PROPOSED CONCRETE MEDIAN SURFACE
- (7) PROPOSED SIDEWALK
- (8) PROPOSED STABILIZED GRANULAR MATERIAL SUBBASE, 4"
- (9) AGGREGATE BASE COURSE
- (10) PROPOSED TIE BAR

FILE NAME 68683282_Typical Sections-06_BCR.dgn

AECOM
303 EAST WACKER DRIVE, SUITE 1400
CHICAGO, IL 60601-5276
PHONE: (312) 373-7700 FAX: (312) 373-6800

USER NAME = SearsB	DESIGNED - LMB	REVISED -	
	DRAWN - LMB	REVISED -	
PLOT SCALE = 20.0000 ' / in.	CHECKED - WBS	REVISED -	
PLOT DATE = 8/30/2019	DATE - 8/30/19	REVISED -	

STATE OF ILLINOIS
DEPARTMENT OF TRANSPORTATION

BRUSH COLLEGE ROAD
TYPICAL SECTIONS

SCALE: 1"=10' | SHEET 6 OF 32 SHEETS | STA. 58+00.00 TO STA. 59+00.00

F.A.U. RTE.	SECTION	COUNTY	TOTAL SHEETS	SHEET NO.
7448	09-00933-01-BR	MACON	74	7
		CONTRACT NO. 6WGY(165)		
	ILLINOIS	FED. AID PROJECT		

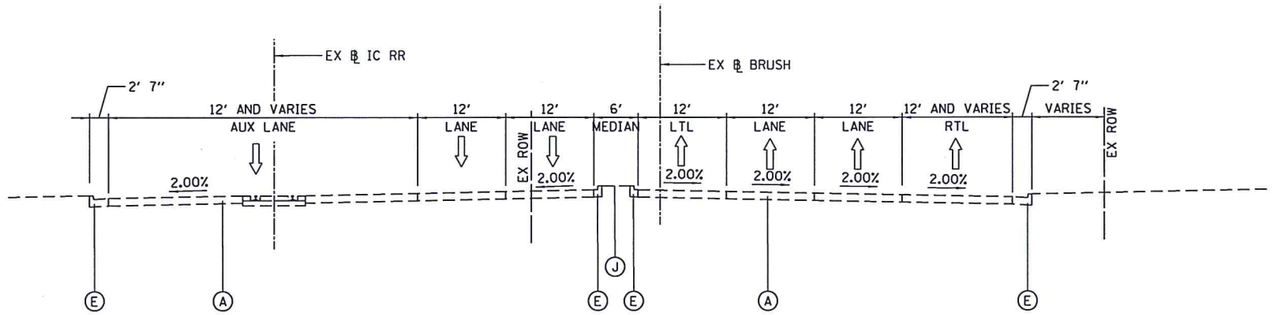

EXISTING BRUSH COLLEGE ROAD

LOOKING NORTH

PR ℄ BRUSH COLLEGE ROAD STA 60+50.33 TO STA 62+33.99

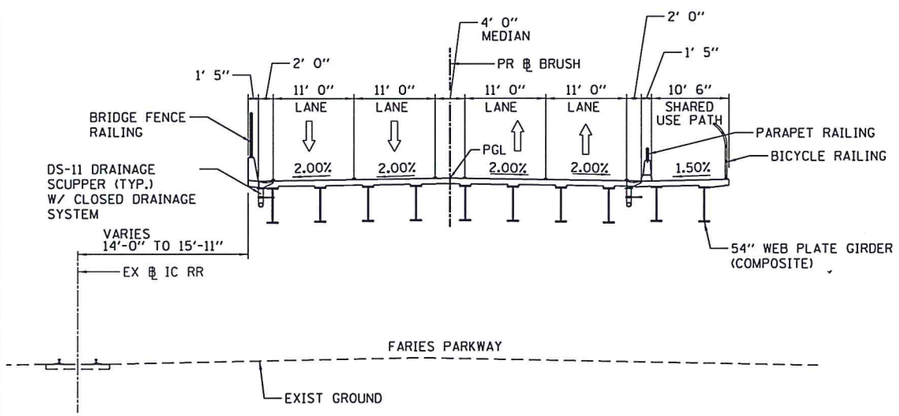

PROPOSED BRUSH COLLEGE ROAD

LOOKING NORTH

PR ℄ BRUSH COLLEGE ROAD STA 60+50.33 TO STA 62+33.99

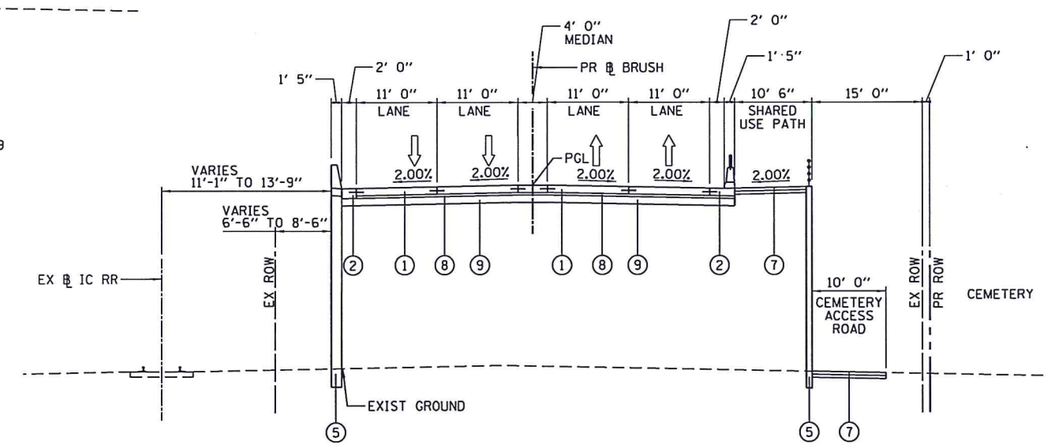

PROPOSED BRUSH COLLEGE ROAD

LOOKING NORTH

PR ℄ BRUSH COLLEGE ROAD STA 62+33.99 TO STA 64+72.05

EXISTING LEGEND

- (A) EXISTING CONCRETE PAVEMENT, VARIES 10" TO 12"
- (B) EXISTING ASPHALT TREATED OPEN-GRADED DRAINAGE LAYER, 4"
- (C) EXISTING GEOTECHNICAL FABRIC
- (D) EXISTING STEEL PLATE BEAM GUARD RAIL
- (E) EXISTING COMBINATION CONCRETE CURB AND GUTTER, TYPE B-6.24
- (F) EXISTING COMBINATION CONCRETE CURB AND GUTTER, TYPE M-6.06
- (G) EXISTING CORRUGATED MEDIAN
- (H) EXISTING CONCRETE BARRIER WALL
- (I) EXISTING TIE BAR
- (J) EXISTING CONCRETE MEDIAN SURFACE
- (K) EXISTING PIPE UNDERDRAINS, 4"
- (L) EXISTING STEEL SHEET PILING
- (M) EXISTING SIDEWALK

PROPOSED LEGEND

- (1) PROPOSED PAVEMENT
- (2) PROPOSED COMBINATION CONCRETE CURB AND GUTTER, TYPE B-6.24
- (3) PROPOSED COMBINATION CONCRETE CURB AND GUTTER, TYPE M-6.06
- (4) PROPOSED CONCRETE BARRIER WALL
- (5) PROPOSED MSE RETAINING WALL
- (6) PROPOSED CONCRETE MEDIAN SURFACE
- (7) PROPOSED SIDEWALK
- (8) PROPOSED STABILIZED GRANULAR MATERIAL SUBBASE, 4"
- (9) AGGREGATE BASE COURSE
- (10) PROPOSED TIE BAR

AECOM
303 EAST WACKER DRIVE, SUITE 1400
CHICAGO, IL 60601-5276
PHONE: (312) 373-7700 FAX: (312) 373-6800

USER NAME = SearsB	DESIGNED - LMB	REVISED -
	DRAWN - LMB	REVISED -
PLOT SCALE = 20.0000 ' / in.	CHECKED - WBS	REVISED -
PLOT DATE = 8/30/2019	DATE - 8/30/19	REVISED -

STATE OF ILLINOIS
DEPARTMENT OF TRANSPORTATION

BRUSH COLLEGE ROAD
TYPICAL SECTIONS

SCALE: 1"=10' | SHEET 7 OF 32 SHEETS | STA. 59+00.00 TO STA. 63+00.00

F.A.U. RTE.	SECTION	COUNTY	TOTAL SHEETS	SHEET NO.
7448	09-00933-01-BR	MACON	74	8
		CONTRACT NO. 6WGY(165)		
		ILLINOIS FED. AID PROJECT		

FILE NAME 68603202_Typical Sections-07.BCR.dgn

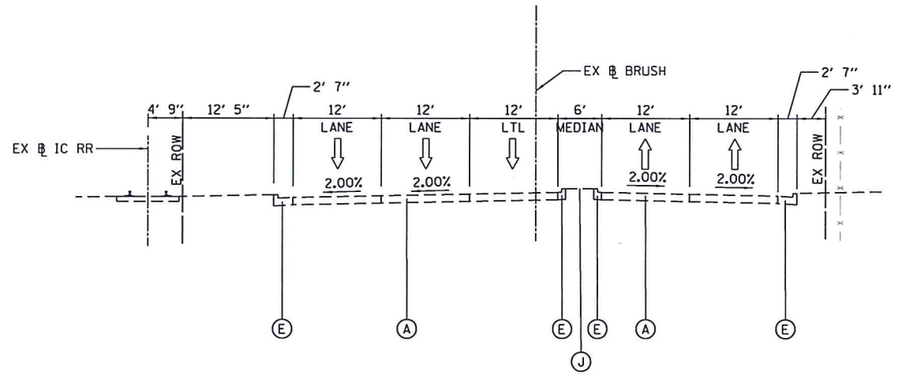

EXISTING BRUSH COLLEGE ROAD

LOOKING NORTH

PR ℄ BRUSH COLLEGE ROAD STA 62+33.99 TO STA 69+00.00

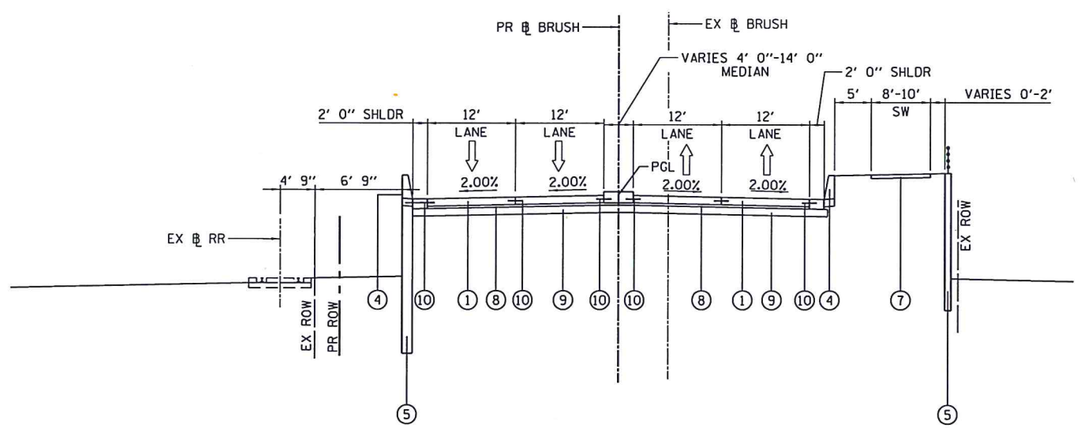

PROPOSED BRUSH COLLEGE ROAD

LOOKING NORTH

PR ℄ BRUSH COLLEGE ROAD STA 64+72.05 TO STA 69+00.00

EXISTING LEGEND

- (A) EXISTING CONCRETE PAVEMENT, VARIES 10" TO 12"
- (B) EXISTING ASPHALT TREATED OPEN-GRADED DRAINAGE LAYER, 4"
- (C) EXISTING GEOTECHNICAL FABRIC
- (D) EXISTING STEEL PLATE BEAM GUARD RAIL
- (E) EXISTING COMBINATION CONCRETE CURB AND GUTTER, TYPE B-6.24
- (F) EXISTING COMBINATION CONCRETE CURB AND GUTTER, TYPE M-6.06
- (G) EXISTING CORRUGATED MEDIAN
- (H) EXISTING CONCRETE BARRIER WALL
- (I) EXISTING TIE BAR
- (J) EXISTING CONCRETE MEDIAN SURFACE
- (K) EXISTING PIPE UNDERDRAINS, 4"
- (L) EXISTING STEEL SHEET PILING
- (M) EXISTING SIDEWALK

PROPOSED LEGEND

- (1) PROPOSED PAVEMENT
- (2) PROPOSED COMBINATION CONCRETE CURB AND GUTTER, TYPE B-6.24
- (3) PROPOSED COMBINATION CONCRETE CURB AND GUTTER, TYPE M-6.06
- (4) PROPOSED CONCRETE BARRIER WALL
- (5) PROPOSED MSE RETAINING WALL
- (6) PROPOSED CONCRETE MEDIAN SURFACE
- (7) PROPOSED SIDEWALK
- (8) PROPOSED STABILIZED GRANULAR MATERIAL SUBBASE, 4"
- (9) AGGREGATE BASE COURSE
- (10) PROPOSED TIE BAR

FILE NAME 69603202_Typical Sections-08_BCR.dgn

AECOM
303 EAST WACKER DRIVE, SUITE 1400
CHICAGO, IL 60601-5276
PHONE: (312) 373-7700 FAX: (312) 373-6800

USER NAME = SearsB	DESIGNED - LMB	REVISED -	
	DRAWN - LMB	REVISED -	
PLOT SCALE = 20.0000 ' / in.	CHECKED - WBS	REVISED -	
PLOT DATE = 8/30/2019	DATE - 8/30/19	REVISED -	

STATE OF ILLINOIS
DEPARTMENT OF TRANSPORTATION

BRUSH COLLEGE ROAD
TYPICAL SECTIONS

SCALE: 1"=10' | SHEET 8 OF 32 SHEETS | STA. 63+00.00 TO STA. 69+00.00

F.A.U. RTE.	SECTION	COUNTY	TOTAL SHEETS	SHEET NO.
7448	09-00933-01-BR	MACON	74	9
		CONTRACT NO. 6WGY(165)		
		ILLINOIS FED. AID PROJECT		

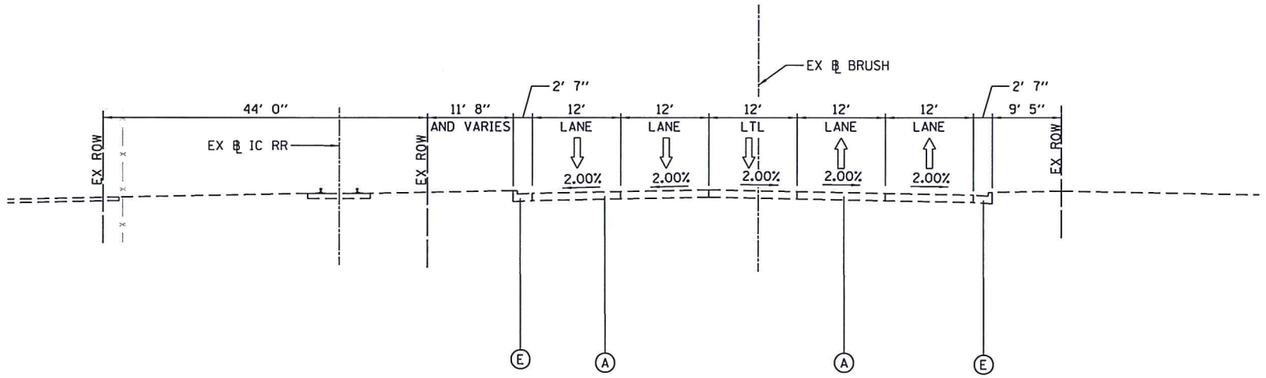

EXISTING BRUSH COLLEGE ROAD

LOOKING NORTH

PR ℄ BRUSH COLLEGE ROAD STA 69+00.00 TO STA 73+00.00

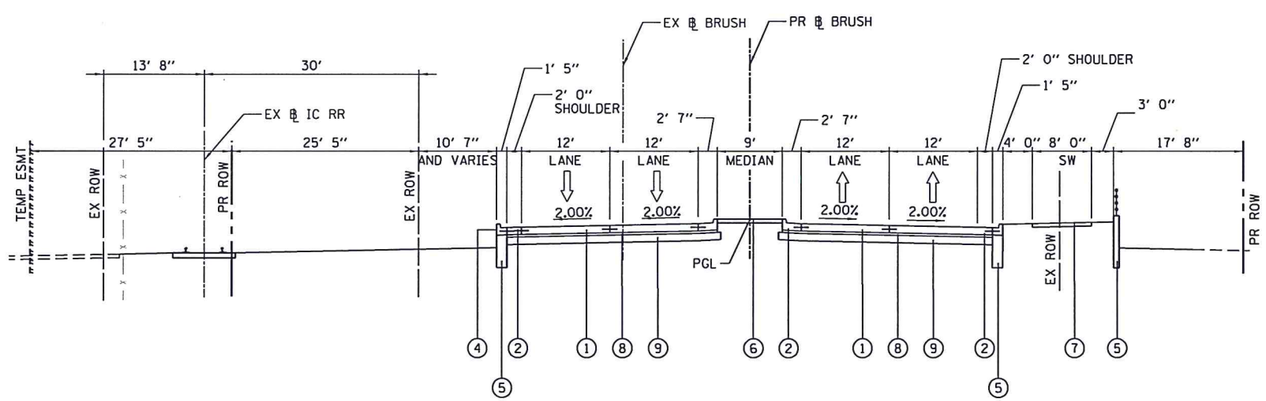

PROPOSED BRUSH COLLEGE ROAD

LOOKING NORTH

PR ℄ BRUSH COLLEGE ROAD STA 69+00.00 TO STA 73+00.00

EXISTING LEGEND

- (A) EXISTING CONCRETE PAVEMENT, VARIES 10" TO 12"
- (B) EXISTING ASPHALT TREATED OPEN-GRADED DRAINAGE LAYER, 4"
- (C) EXISTING GEOTECHNICAL FABRIC
- (D) EXISTING STEEL PLATE BEAM GUARD RAIL
- (E) EXISTING COMBINATION CONCRETE CURB AND GUTTER, TYPE B-6.24
- (F) EXISTING COMBINATION CONCRETE CURB AND GUTTER, TYPE M-6.06
- (G) EXISTING CORRUGATED MEDIAN
- (H) EXISTING CONCRETE BARRIER WALL
- (I) EXISTING TIE BAR
- (J) EXISTING CONCRETE MEDIAN SURFACE
- (K) EXISTING PIPE UNDERDRAINS, 4"
- (L) EXISTING STEEL SHEET PILING
- (M) EXISTING SIDEWALK

PROPOSED LEGEND

- (1) PROPOSED PAVEMENT
- (2) PROPOSED COMBINATION CONCRETE CURB AND GUTTER, TYPE B-6.24
- (3) PROPOSED COMBINATION CONCRETE CURB AND GUTTER, TYPE M-6.06
- (4) PROPOSED CONCRETE BARRIER WALL
- (5) PROPOSED MSE RETAINING WALL
- (6) PROPOSED CONCRETE MEDIAN SURFACE
- (7) PROPOSED SIDEWALK
- (8) PROPOSED STABILIZED GRANULAR MATERIAL SUBBASE, 4"
- (9) AGGREGATE BASE COURSE
- (10) PROPOSED TIE BAR

FILE NAME 68603282_Typical Sections-09_BCR.dgn

AECOM
303 EAST WACKER DRIVE, SUITE 1400
CHICAGO, IL 60601-5276
PHONE: (312) 373-7700 FAX: (312) 373-6800

USER NAME = SearsB	DESIGNED - LMB	REVISED -	
	DRAWN - LMB	REVISED -	
PLOT SCALE = 20.0000 ' / in.	CHECKED - WBS	REVISED -	
PLOT DATE = 8/30/2019	DATE - 8/30/19	REVISED -	

STATE OF ILLINOIS
DEPARTMENT OF TRANSPORTATION

BRUSH COLLEGE ROAD
TYPICAL SECTIONS

SCALE: 1"=10' | SHEET 9 OF 32 SHEETS | STA. 69+00.00 TO STA. 73+00.00

F.A.U. RTE.	SECTION	COUNTY	TOTAL SHEETS	SHEET NO.
7448	09-00933-01-BR	MACON	74	10

CONTRACT NO. 6WGY(165)

ILLINOIS FED. AID PROJECT

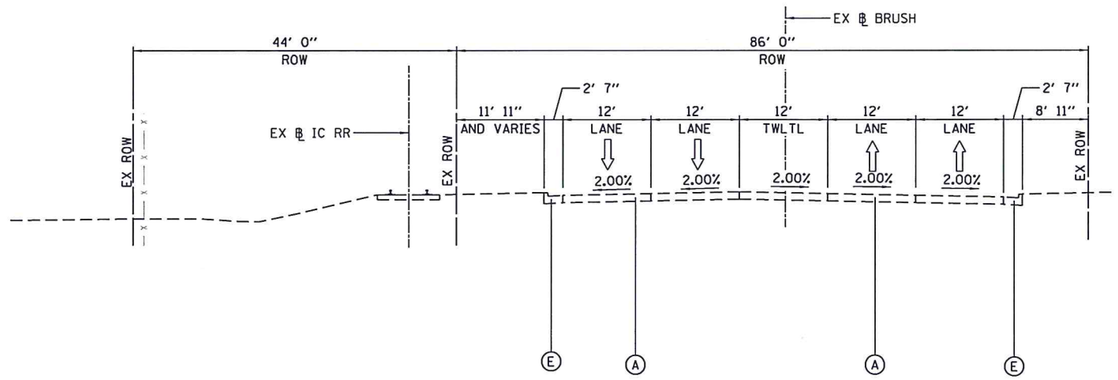

EXISTING BRUSH COLLEGE ROAD

LOOKING NORTH

PR ℄ BRUSH COLLEGE ROAD STA 73+00.00 TO STA 76+00.00

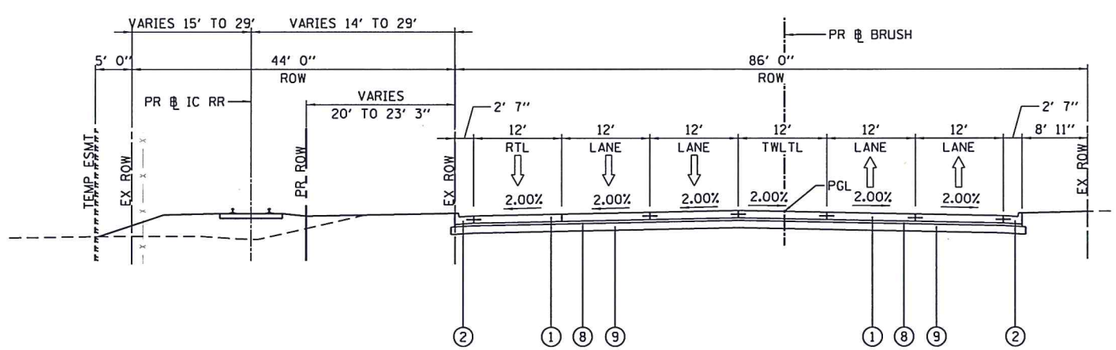

PROPOSED BRUSH COLLEGE ROAD

LOOKING NORTH

PR ℄ BRUSH COLLEGE ROAD STA 73+00.00 TO STA 76+00.00

EXISTING LEGEND

- (A) EXISTING CONCRETE PAVEMENT, VARIES 10" TO 12"
- (B) EXISTING ASPHALT TREATED OPEN-GRADED DRAINAGE LAYER, 4"
- (C) EXISTING GEOTECHNICAL FABRIC
- (D) EXISTING STEEL PLATE BEAM GUARD RAIL
- (E) EXISTING COMBINATION CONCRETE CURB AND GUTTER, TYPE B-6.24
- (F) EXISTING COMBINATION CONCRETE CURB AND GUTTER, TYPE M-6.06
- (G) EXISTING CORRUGATED MEDIAN
- (H) EXISTING CONCRETE BARRIER WALL
- (I) EXISTING TIE BAR
- (J) EXISTING CONCRETE MEDIAN SURFACE
- (K) EXISTING PIPE UNDERDRAINS, 4"
- (L) EXISTING STEEL SHEET PILING
- (M) EXISTING SIDEWALK

PROPOSED LEGEND

- (1) PROPOSED PAVEMENT
- (2) PROPOSED COMBINATION CONCRETE CURB AND GUTTER, TYPE B-6.24
- (3) PROPOSED COMBINATION CONCRETE CURB AND GUTTER, TYPE M-6.06
- (4) PROPOSED CONCRETE BARRIER WALL
- (5) PROPOSED MSE RETAINING WALL
- (6) PROPOSED CONCRETE MEDIAN SURFACE
- (7) PROPOSED SIDEWALK
- (8) PROPOSED STABILIZED GRANULAR MATERIAL SUBBASE, 4"
- (9) AGGREGATE BASE COURSE
- (10) PROPOSED TIE BAR

FILE NAME 60603202_Typical Sections-10_BCR.dgn

AECOM
303 EAST WACKER DRIVE, SUITE 1400
CHICAGO, IL 60601-5276
PHONE: (312) 373-7700 FAX: (312) 373-6800

USER NAME = SearsB	DESIGNED - LMB	REVISED -	
	DRAWN - LMB	REVISED -	
PLOT SCALE = 20.0000 ' / in.	CHECKED - WBS	REVISED -	
PLOT DATE = 8/30/2019	DATE - 8/30/19	REVISED -	

STATE OF ILLINOIS
DEPARTMENT OF TRANSPORTATION

BRUSH COLLEGE ROAD
TYPICAL SECTIONS

SCALE: 1"=10' | SHEET 10 OF 32 SHEETS | STA. 73+00.00 TO STA. 76+00.00

F.A.U. RTE.	SECTION	COUNTY	TOTAL SHEETS	SHEET NO.
7448	09-00933-01-BR	MACON	74	11
		CONTRACT NO. 6WGY(165)		
	ILLINOIS	FED. AID PROJECT		

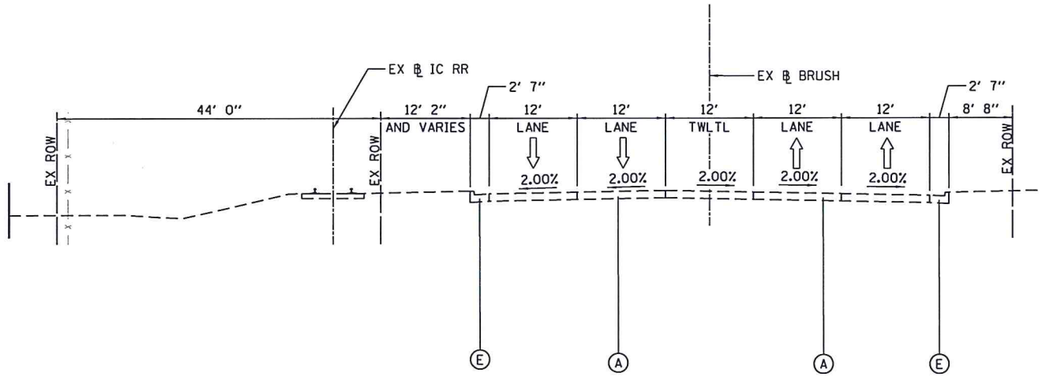

EXISTING BRUSH COLLEGE ROAD

LOOKING NORTH

PR ℄ BRUSH COLLEGE ROAD STA 76+00.00 TO STA 78+00.00

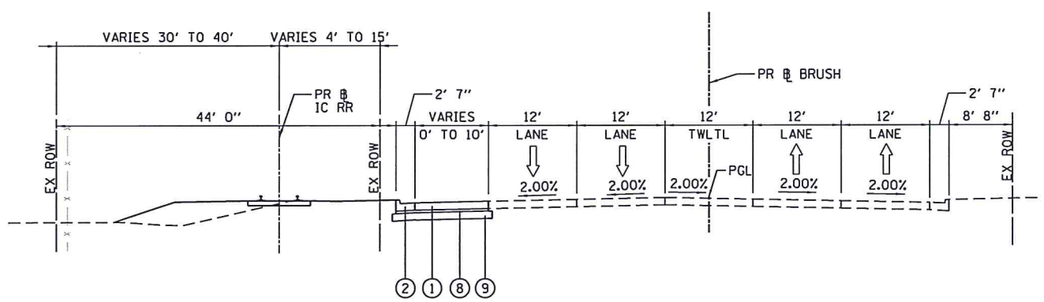

PROPOSED BRUSH COLLEGE ROAD

LOOKING NORTH

PR ℄ BRUSH COLLEGE ROAD STA 76+00.00 TO STA 78+00.00

EXISTING LEGEND

- (A) EXISTING CONCRETE PAVEMENT, VARIES 10" TO 12"
- (B) EXISTING ASPHALT TREATED OPEN-GRADED DRAINAGE LAYER, 4"
- (C) EXISTING GEOTECHNICAL FABRIC
- (D) EXISTING STEEL PLATE BEAM GUARD RAIL
- (E) EXISTING COMBINATION CONCRETE CURB AND GUTTER, TYPE B-6.24
- (F) EXISTING COMBINATION CONCRETE CURB AND GUTTER, TYPE M-6.06
- (G) EXISTING CORRUGATED MEDIAN
- (H) EXISTING CONCRETE BARRIER WALL
- (I) EXISTING TIE BAR
- (J) EXISTING CONCRETE MEDIAN SURFACE
- (K) EXISTING PIPE UNDERDRAINS, 4"
- (L) EXISTING STEEL SHEET PILING
- (M) EXISTING SIDEWALK

PROPOSED LEGEND

- (1) PROPOSED PAVEMENT
- (2) PROPOSED COMBINATION CONCRETE CURB AND GUTTER, TYPE B-6.24
- (3) PROPOSED COMBINATION CONCRETE CURB AND GUTTER, TYPE M-6.06
- (4) PROPOSED CONCRETE BARRIER WALL
- (5) PROPOSED MSE RETAINING WALL
- (6) PROPOSED CONCRETE MEDIAN SURFACE
- (7) PROPOSED SIDEWALK
- (8) PROPOSED STABILIZED GRANULAR MATERIAL SUBBASE, 4"
- (9) AGGREGATE BASE COURSE
- (10) PROPOSED TIE BAR

FILE NAME 68683282_Typical Sections-11.BCR.dgn

AECOM
303 EAST WACKER DRIVE, SUITE 1400
CHICAGO, IL 60601-5276
PHONE: (312) 373-7700 FAX: (312) 373-6800

USER NAME = SearsB	DESIGNED - LMB	REVISED -	
	DRAWN - LMB	REVISED -	
PLOT SCALE = 20.0000 ' / in.	CHECKED - WBS	REVISED -	
PLOT DATE = 8/30/2019	DATE - 8/30/19	REVISED -	

STATE OF ILLINOIS
DEPARTMENT OF TRANSPORTATION

BRUSH COLLEGE ROAD
TYPICAL SECTIONS

SCALE: 1"=10' | SHEET 11 OF 32 SHEETS | STA. 76+00.00 TO STA. 78+00.00

F.A.U. RTE.	SECTION	COUNTY	TOTAL SHEETS	SHEET NO.
7448	09-00933-01-BR	MACON	74	12
		CONTRACT NO. 6WGY(165)		
		ILLINOIS FED. AID PROJECT		

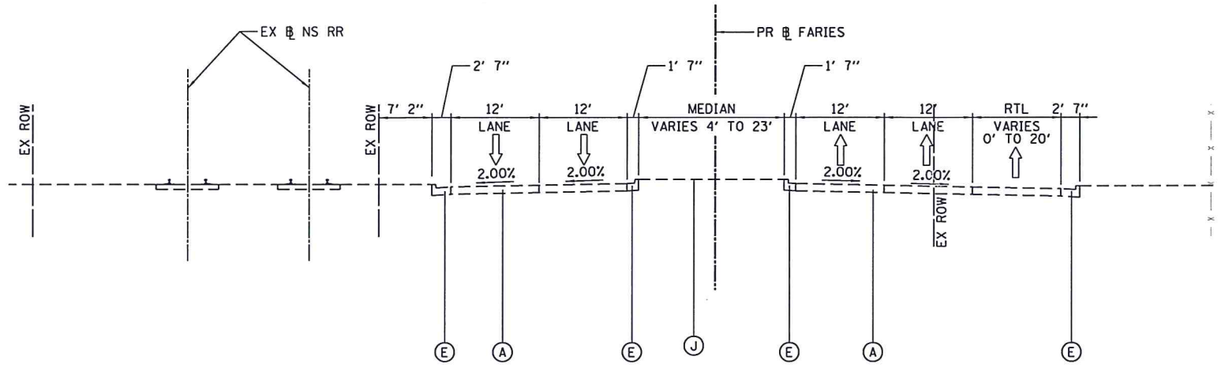

EXISTING FARIES PARKWAY

LOOKING EAST

PR ℄ FARIES PARKWAY STA 205+00.00 TO STA 207+00.00

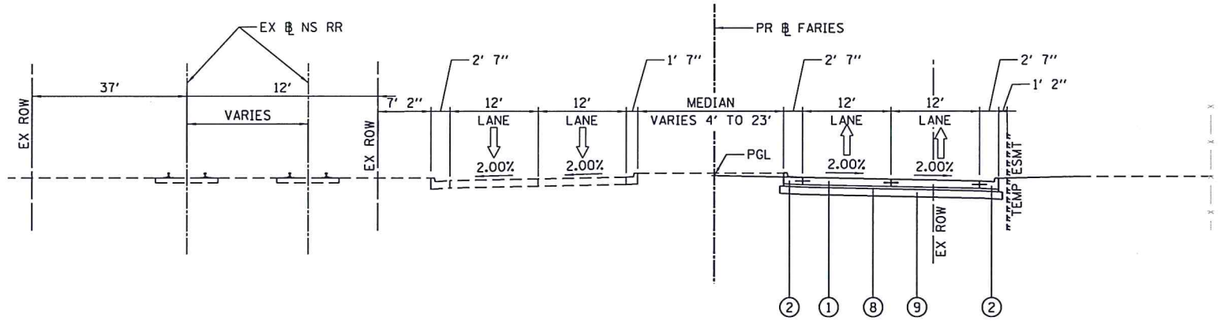

PROPOSED FARIES PARKWAY

LOOKING EAST

PR ℄ FARIES PARKWAY STA 205+00.00 TO STA 207+00.00

EXISTING LEGEND

- (A) EXISTING CONCRETE PAVEMENT, VARIES 10" TO 12"
- (B) EXISTING ASPHALT TREATED OPEN-GRADED DRAINAGE LAYER, 4"
- (C) EXISTING GEOTECHNICAL FABRIC
- (D) EXISTING STEEL PLATE BEAM GUARD RAIL
- (E) EXISTING COMBINATION CONCRETE CURB AND GUTTER, TYPE B-6.24
- (F) EXISTING COMBINATION CONCRETE CURB AND GUTTER, TYPE M-6.06
- (G) EXISTING CORRUGATED MEDIAN
- (H) EXISTING CONCRETE BARRIER WALL
- (I) EXISTING TIE BAR
- (J) EXISTING CONCRETE MEDIAN SURFACE
- (K) EXISTING PIPE UNDERDRAINS, 4"
- (L) EXISTING STEEL SHEET PILING
- (M) EXISTING SIDEWALK

PROPOSED LEGEND

- (1) PROPOSED PAVEMENT
- (2) PROPOSED COMBINATION CONCRETE CURB AND GUTTER, TYPE B-6.24
- (3) PROPOSED COMBINATION CONCRETE CURB AND GUTTER, TYPE M-6.06
- (4) PROPOSED CONCRETE BARRIER WALL
- (5) PROPOSED MSE RETAINING WALL
- (6) PROPOSED CONCRETE MEDIAN SURFACE
- (7) PROPOSED SIDEWALK
- (8) PROPOSED STABILIZED GRANULAR MATERIAL SUBBASE, 4"
- (9) AGGREGATE BASE COURSE
- (10) PROPOSED TIE BAR

FILE NAME 68693282_Typical Sections-12_Faries.dgn

AECOM
303 EAST WACKER DRIVE, SUITE 1400
CHICAGO, IL 60601-5276
PHONE: (312) 373-7700 FAX: (312) 373-6800

USER NAME = SearsB	DESIGNED - LMB	REVISED -	
	DRAWN - LMB	REVISED -	
PLOT SCALE = 20.0000 ' / in.	CHECKED - WBS	REVISED -	
PLOT DATE = 8/30/2019	DATE - 8/30/19	REVISED -	

STATE OF ILLINOIS
DEPARTMENT OF TRANSPORTATION

FARIES PARKWAY
TYPICAL SECTIONS

SCALE: 1"=10' | SHEET 12 OF 32 SHEETS | STA. 205+00.00 TO STA. 207+00.00

F.A.U. RTE.	SECTION	COUNTY	TOTAL SHEETS	SHEET NO.
7448	09-00933-01-BR	MACON	74	13
		CONTRACT NO. 6WGY(165)		
		ILLINOIS FED. AID PROJECT		

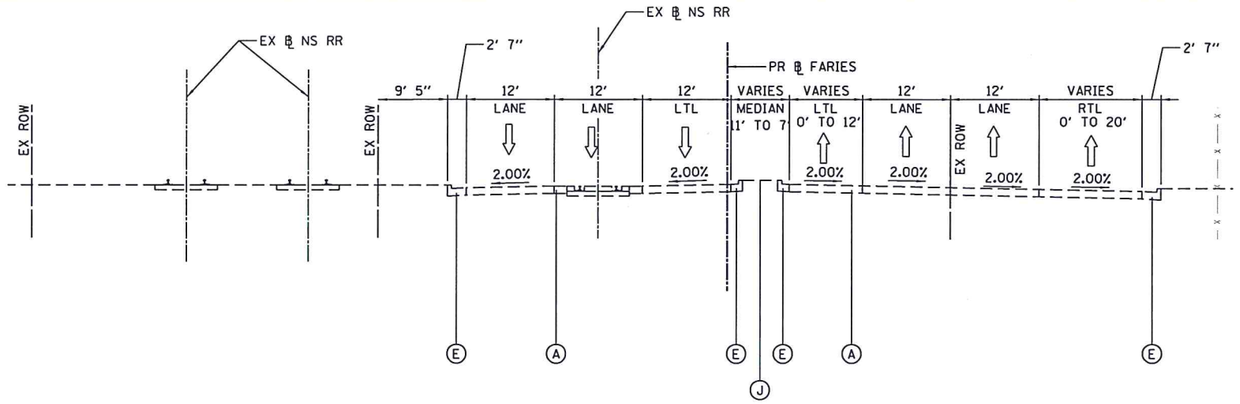

EXISTING FARIES PARKWAY

LOOKING EAST

PR ℄ FARIES PARKWAY STA 207+00.00 TO STA 209+00.00

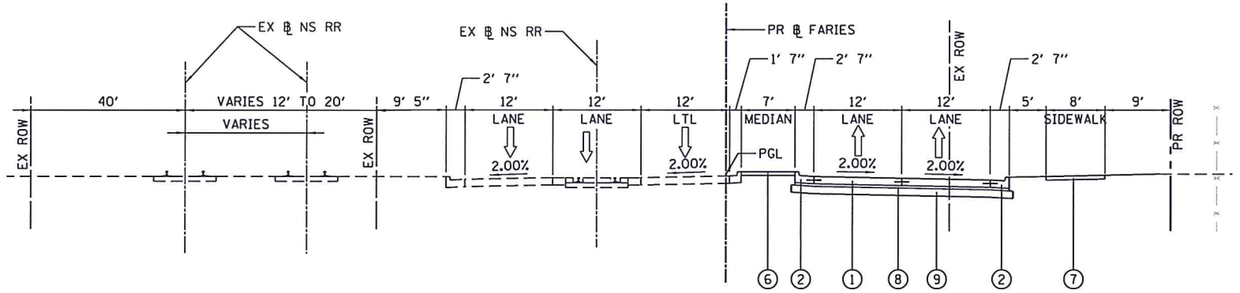

PROPOSED FARIES PARKWAY

LOOKING EAST

PR ℄ FARIES PARKWAY STA 207+00.00 TO STA 209+00.00

EXISTING LEGEND

- (A) EXISTING CONCRETE PAVEMENT, VARIES 10" TO 12"
- (B) EXISTING ASPHALT TREATED OPEN-GRADED DRAINAGE LAYER, 4"
- (C) EXISTING GEOTECHNICAL FABRIC
- (D) EXISTING STEEL PLATE BEAM GUARD RAIL
- (E) EXISTING COMBINATION CONCRETE CURB AND GUTTER, TYPE B-6.24
- (F) EXISTING COMBINATION CONCRETE CURB AND GUTTER, TYPE M-6.06
- (G) EXISTING CORRUGATED MEDIAN
- (H) EXISTING CONCRETE BARRIER WALL
- (I) EXISTING TIE BAR
- (J) EXISTING CONCRETE MEDIAN SURFACE
- (K) EXISTING PIPE UNDERDRAINS, 4"
- (L) EXISTING STEEL SHEET PILING
- (M) EXISTING SIDEWALK

PROPOSED LEGEND

- (1) PROPOSED PAVEMENT
- (2) PROPOSED COMBINATION CONCRETE CURB AND GUTTER, TYPE B-6.24
- (3) PROPOSED COMBINATION CONCRETE CURB AND GUTTER, TYPE M-6.06
- (4) PROPOSED CONCRETE BARRIER WALL
- (5) PROPOSED MSE RETAINING WALL
- (6) PROPOSED CONCRETE MEDIAN SURFACE
- (7) PROPOSED SIDEWALK
- (8) PROPOSED STABILIZED GRANULAR MATERIAL SUBBASE, 4"
- (9) AGGREGATE BASE COURSE
- (10) PROPOSED TIE BAR

FILE NAME 68683282_Typical Sections-13_Faries.dgn

AECOM
303 EAST WACKER DRIVE, SUITE 1400
CHICAGO, IL 60601-5276
PHONE: (312) 373-7700 FAX: (312) 373-6800

USER NAME = SearsB	DESIGNED - LMB	REVISED -	
	DRAWN - LMB	REVISED -	
PLOT SCALE = 20.0000 ' / in.	CHECKED - WBS	REVISED -	
PLOT DATE = 8/30/2019	DATE - 8/30/19	REVISED -	

STATE OF ILLINOIS
DEPARTMENT OF TRANSPORTATION

FARIES PARKWAY
TYPICAL SECTIONS

SCALE: 1"=10' | SHEET 13 OF 32 SHEETS | STA. 207+00.00 TO STA. 209+00.00

F.A.U. RTE.	SECTION	COUNTY	TOTAL SHEETS	SHEET NO.
7448	09-00933-01-BR	MACON	74	14

CONTRACT NO. 6WGY(165)

ILLINOIS FED. AID PROJECT

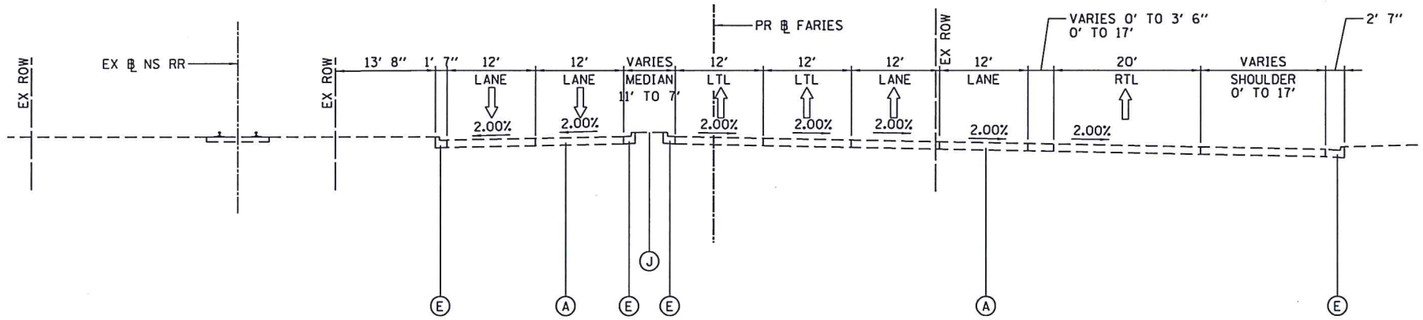

EXISTING FARIES PARKWAY

LOOKING EAST

PR ℄ FARIES PARKWAY STA 209+00.00 TO STA 212+00.00

EXISTING LEGEND

- (A) EXISTING CONCRETE PAVEMENT, VARIES 10" TO 12"
- (B) EXISTING ASPHALT TREATED OPEN-GRADED DRAINAGE LAYER, 4"
- (C) EXISTING GEOTECHNICAL FABRIC
- (D) EXISTING STEEL PLATE BEAM GUARD RAIL
- (E) EXISTING COMBINATION CONCRETE CURB AND GUTTER, TYPE B-6.24
- (F) EXISTING COMBINATION CONCRETE CURB AND GUTTER, TYPE M-6.06
- (G) EXISTING CORRUGATED MEDIAN
- (H) EXISTING CONCRETE BARRIER WALL
- (I) EXISTING TIE BAR
- (J) EXISTING CONCRETE MEDIAN SURFACE
- (K) EXISTING PIPE UNDERDRAINS, 4"
- (L) EXISTING STEEL SHEET PILING
- (M) EXISTING SIDEWALK

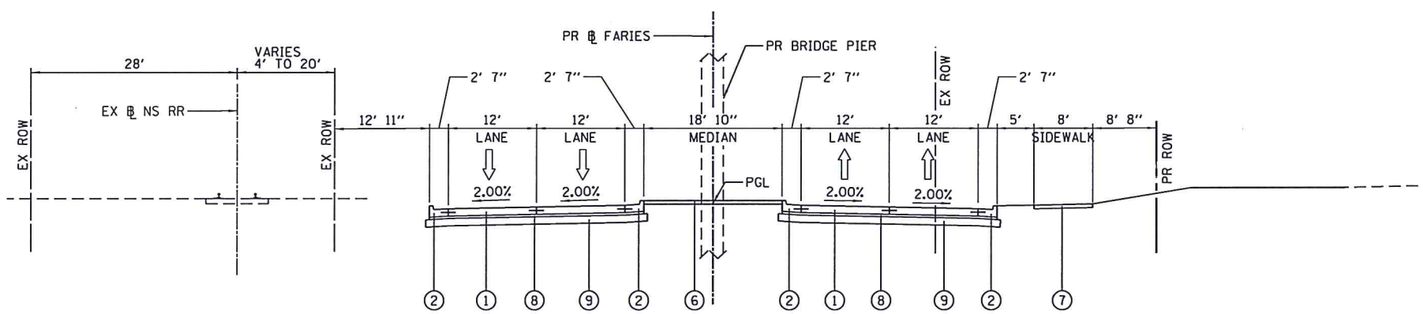

PROPOSED FARIES PARKWAY

LOOKING EAST

PR ℄ FARIES PARKWAY STA 209+00.00 TO STA 212+00.00

PROPOSED LEGEND

- (1) PROPOSED PAVEMENT
- (2) PROPOSED COMBINATION CONCRETE CURB AND GUTTER, TYPE B-6.24
- (3) PROPOSED COMBINATION CONCRETE CURB AND GUTTER, TYPE M-6.06
- (4) PROPOSED CONCRETE BARRIER WALL
- (5) PROPOSED MSE RETAINING WALL
- (6) PROPOSED CONCRETE MEDIAN SURFACE
- (7) PROPOSED SIDEWALK
- (8) PROPOSED STABILIZED GRANULAR MATERIAL SUBBASE, 4"
- (9) AGGREGATE BASE COURSE
- (10) PROPOSED TIE BAR

FILE NAME 68603202_Typical Sections-14_Faries.dgn

AECOM
303 EAST WACKER DRIVE, SUITE 1400
CHICAGO, IL 60601-5276
PHONE: (312) 373-7700 FAX: (312) 373-6800

USER NAME = SearsB	DESIGNED - LMB	REVISED -	
	DRAWN - LMB	REVISED -	
PLOT SCALE = 20.0000 ' / in.	CHECKED - WBS	REVISED -	
PLOT DATE = 8/30/2019	DATE - 8/30/19	REVISED -	

STATE OF ILLINOIS
DEPARTMENT OF TRANSPORTATION

FARIES PARKWAY
TYPICAL SECTIONS

SCALE: 1"=10' | SHEET 14 OF 32 SHEETS | STA. 209+00.00 TO STA. 212+00.00

F.A.U. RTE.	SECTION	COUNTY	TOTAL SHEETS	SHEET NO.
7448	09-00933-01-BR	MACON	74	15

CONTRACT NO. 6WGY(165)

ILLINOIS FED. AID PROJECT

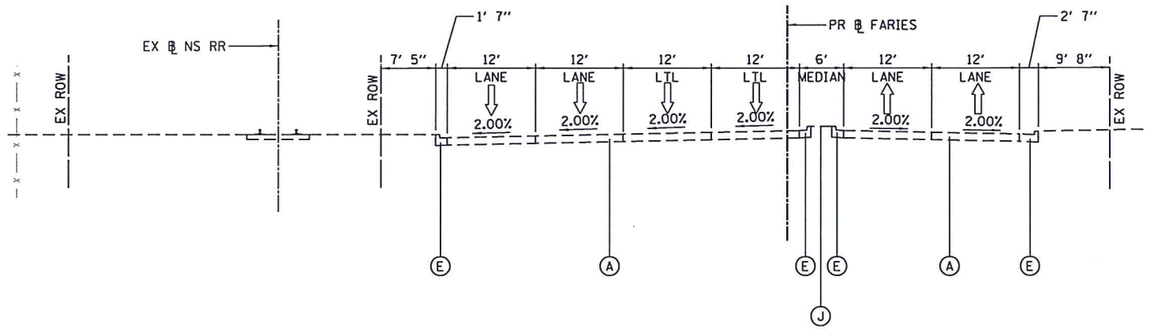

EXISTING FARIES PARKWAY

LOOKING EAST

PR ℄ FARIES PARKWAY STA 212+00.00 TO STA 213+00.00

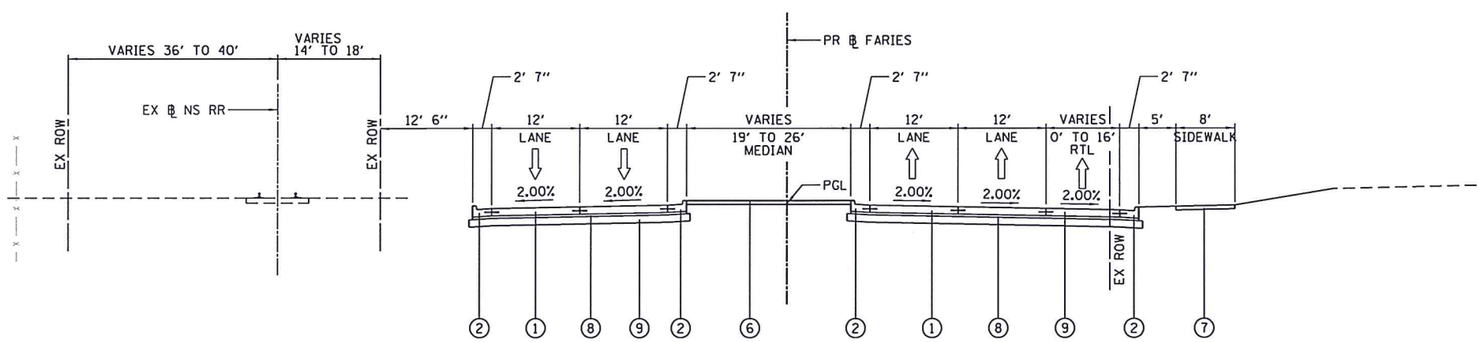

PROPOSED FARIES PARKWAY

LOOKING EAST

PR ℄ FARIES PARKWAY STA 212+00.00 TO STA 213+00.00

EXISTING LEGEND

- (A) EXISTING CONCRETE PAVEMENT, VARIES 10" TO 12"
- (B) EXISTING ASPHALT TREATED OPEN-GRADED DRAINAGE LAYER, 4"
- (C) EXISTING GEOTECHNICAL FABRIC
- (D) EXISTING STEEL PLATE BEAM GUARD RAIL
- (E) EXISTING COMBINATION CONCRETE CURB AND GUTTER, TYPE B-6.24
- (F) EXISTING COMBINATION CONCRETE CURB AND GUTTER, TYPE M-6.06
- (G) EXISTING CORRUGATED MEDIAN
- (H) EXISTING CONCRETE BARRIER WALL
- (I) EXISTING TIE BAR
- (J) EXISTING CONCRETE MEDIAN SURFACE
- (K) EXISTING PIPE UNDERDRAINS, 4"
- (L) EXISTING STEEL SHEET PILING
- (M) EXISTING SIDEWALK

PROPOSED LEGEND

- (1) PROPOSED PAVEMENT
- (2) PROPOSED COMBINATION CONCRETE CURB AND GUTTER, TYPE B-6.24
- (3) PROPOSED COMBINATION CONCRETE CURB AND GUTTER, TYPE M-6.06
- (4) PROPOSED CONCRETE BARRIER WALL
- (5) PROPOSED MSE RETAINING WALL
- (6) PROPOSED CONCRETE MEDIAN SURFACE
- (7) PROPOSED SIDEWALK
- (8) PROPOSED STABILIZED GRANULAR MATERIAL SUBBASE, 4"
- (9) AGGREGATE BASE COURSE
- (10) PROPOSED TIE BAR

FILE NAME 69683282_Typical Sections-15_Faries.dgn

AECOM
303 EAST WACKER DRIVE, SUITE 1400
CHICAGO, IL 60601-5276
PHONE: (312) 373-7700 FAX: (312) 373-6800

USER NAME = SearsB	DESIGNED - LMB	REVISED -	
	DRAWN - LMB	REVISED -	
PLOT SCALE = 20.0000 ' / in.	CHECKED - WBS	REVISED -	
PLOT DATE = 8/30/2019	DATE - 8/30/19	REVISED -	

STATE OF ILLINOIS
DEPARTMENT OF TRANSPORTATION

FARIES PARKWAY
TYPICAL SECTIONS

SCALE: 1"=10' | SHEET 15 OF 32 SHEETS | STA. 212+00.00 TO STA. 213+00.00

F.A.U. RTE.	SECTION	COUNTY	TOTAL SHEETS	SHEET NO.
7448	09-00933-01-BR	MACON	74	16
		CONTRACT NO. 6WGY(165)		
		ILLINOIS FED. AID PROJECT		

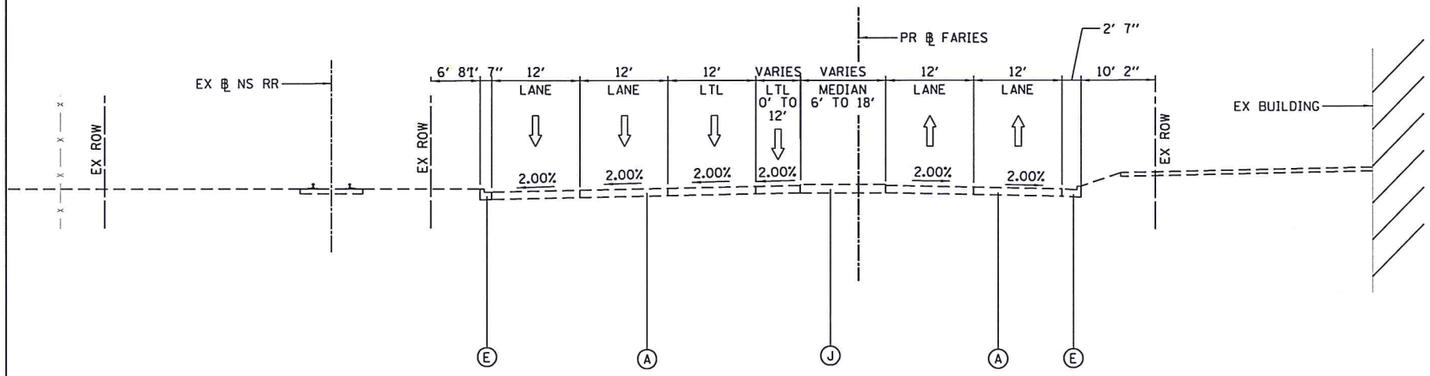

EXISTING FARIES PARKWAY

LOOKING EAST

PR ℄ FARIES PARKWAY STA 213+00.00 TO STA 213+50.00

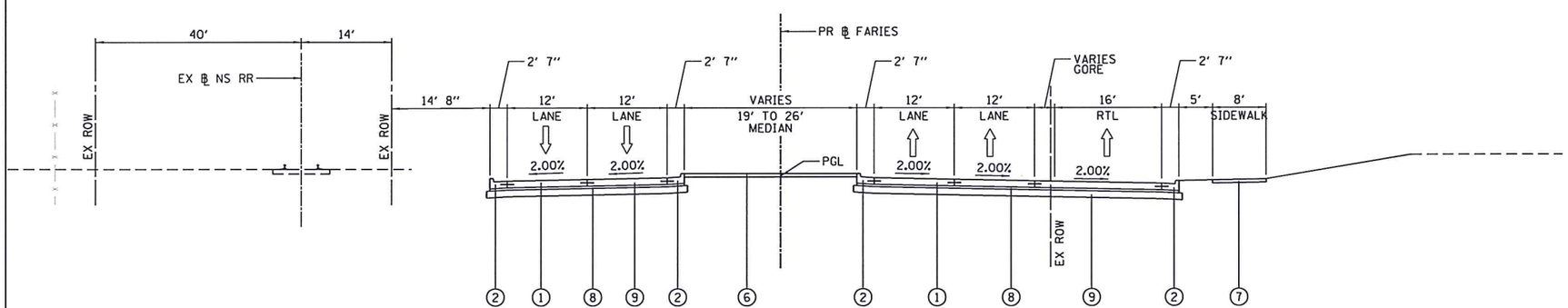

PROPOSED FARIES PARKWAY

LOOKING EAST

PR ℄ FARIES PARKWAY STA 213+00.00 TO STA 213+50.00

EXISTING LEGEND

- (A) EXISTING CONCRETE PAVEMENT, VARIES 10" TO 12"
- (B) EXISTING ASPHALT TREATED OPEN-GRADED DRAINAGE LAYER, 4"
- (C) EXISTING GEOTECHNICAL FABRIC
- (D) EXISTING STEEL PLATE BEAM GUARD RAIL
- (E) EXISTING COMBINATION CONCRETE CURB AND GUTTER, TYPE B-6.24
- (F) EXISTING COMBINATION CONCRETE CURB AND GUTTER, TYPE M-6.06
- (G) EXISTING CORRUGATED MEDIAN
- (H) EXISTING CONCRETE BARRIER WALL
- (I) EXISTING TIE BAR
- (J) EXISTING CONCRETE MEDIAN SURFACE
- (K) EXISTING PIPE UNDERDRAINS, 4"
- (L) EXISTING STEEL SHEET PILING
- (M) EXISTING SIDEWALK

PROPOSED LEGEND

- (1) PROPOSED PAVEMENT
- (2) PROPOSED COMBINATION CONCRETE CURB AND GUTTER, TYPE B-6.24
- (3) PROPOSED COMBINATION CONCRETE CURB AND GUTTER, TYPE M-6.06
- (4) PROPOSED CONCRETE BARRIER WALL
- (5) PROPOSED MSE RETAINING WALL
- (6) PROPOSED CONCRETE MEDIAN SURFACE
- (7) PROPOSED SIDEWALK
- (8) PROPOSED STABILIZED GRANULAR MATERIAL SUBBASE, 4"
- (9) AGGREGATE BASE COURSE
- (10) PROPOSED TIE BAR

FILE NAME 60693202_Typical Sections-16.Farries.dgn

AECOM
303 EAST WACKER DRIVE, SUITE 1400
CHICAGO, IL 60601-5276
PHONE: (312) 373-7700 FAX: (312) 373-6800

USER NAME = SearsB	DESIGNED - LMB	REVISED -	
	DRAWN - LMB	REVISED -	
PLOT SCALE = 20.0000 ' / in.	CHECKED - WBS	REVISED -	
PLOT DATE = 8/30/2019	DATE - 8/30/19	REVISED -	

STATE OF ILLINOIS
DEPARTMENT OF TRANSPORTATION

FARIES PARKWAY
TYPICAL SECTIONS

SCALE: 1"=10' | SHEET 16 OF 32 SHEETS | STA. 213+00.00 TO STA. 213+50.00

F.A.U. RTE.	SECTION	COUNTY	TOTAL SHEETS	SHEET NO.
7448	09-00933-01-BR	MACON	74	17
		CONTRACT NO. 6WGY(165)		
	ILLINOIS	FED. AID PROJECT		

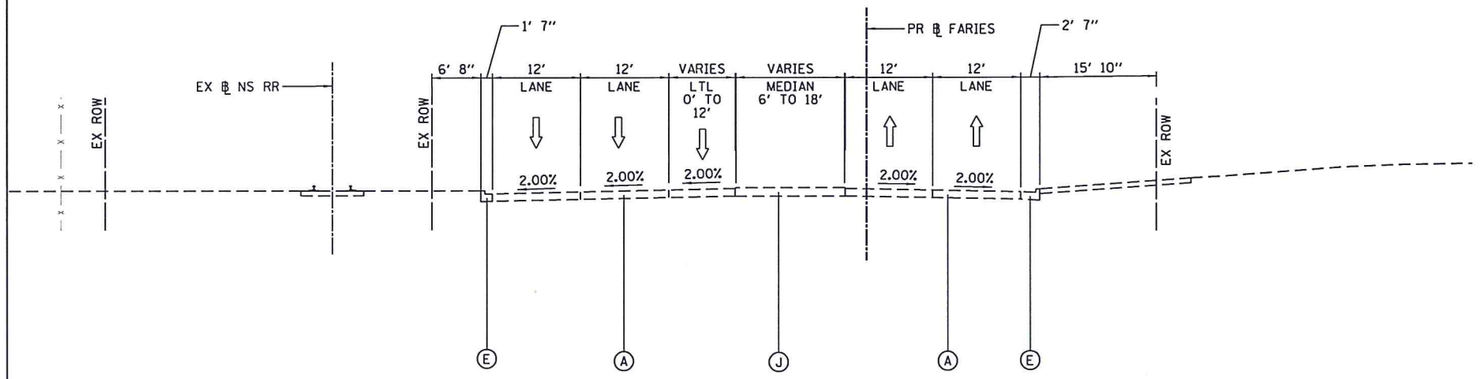

EXISTING FARIES PARKWAY

LOOKING EAST

PR ℄ FARIES PARKWAY STA 213+50.00 TO STA 214+00.00

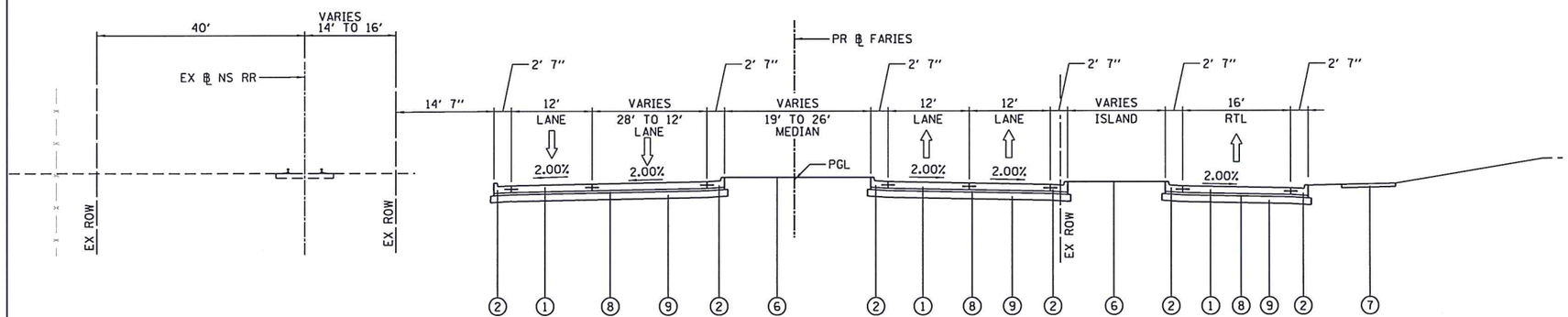

PROPOSED FARIES PARKWAY

LOOKING EAST

PR ℄ FARIES PARKWAY STA 213+50.00 TO STA 214+00.00

EXISTING LEGEND

- (A) EXISTING CONCRETE PAVEMENT, VARIES 10" TO 12"
- (B) EXISTING ASPHALT TREATED OPEN-GRADED DRAINAGE LAYER, 4"
- (C) EXISTING GEOTECHNICAL FABRIC
- (D) EXISTING STEEL PLATE BEAM GUARD RAIL
- (E) EXISTING COMBINATION CONCRETE CURB AND GUTTER, TYPE B-6.24
- (F) EXISTING COMBINATION CONCRETE CURB AND GUTTER, TYPE M-6.06
- (G) EXISTING CORRUGATED MEDIAN
- (H) EXISTING CONCRETE BARRIER WALL
- (I) EXISTING TIE BAR
- (J) EXISTING CONCRETE MEDIAN SURFACE
- (K) EXISTING PIPE UNDERDRAINS, 4"
- (L) EXISTING STEEL SHEET PILING
- (M) EXISTING SIDEWALK

PROPOSED LEGEND

- (1) PROPOSED PAVEMENT
- (2) PROPOSED COMBINATION CONCRETE CURB AND GUTTER, TYPE B-6.24
- (3) PROPOSED COMBINATION CONCRETE CURB AND GUTTER, TYPE M-6.06
- (4) PROPOSED CONCRETE BARRIER WALL
- (5) PROPOSED MSE RETAINING WALL
- (6) PROPOSED CONCRETE MEDIAN SURFACE
- (7) PROPOSED SIDEWALK
- (8) PROPOSED STABILIZED GRANULAR MATERIAL SUBBASE, 4"
- (9) AGGREGATE BASE COURSE
- (10) PROPOSED TIE BAR

FILE NAME 68603282_Typical Sections-17_Faries.dgn

AECOM
303 EAST WACKER DRIVE, SUITE 1400
CHICAGO, IL 60601-5276
PHONE: (312) 373-7700 FAX: (312) 373-6800

USER NAME = SearsB	DESIGNED - LMB	REVISED -
	DRAWN - LMB	REVISED -
PLOT SCALE = 20.0000 ' / in.	CHECKED - WBS	REVISED -
PLOT DATE = 8/30/2019	DATE - 8/30/19	REVISED -

STATE OF ILLINOIS
DEPARTMENT OF TRANSPORTATION

FARIES PARKWAY
TYPICAL SECTIONS

SCALE: 1"=10' | SHEET 17 OF 32 SHEETS | STA. 213+50.00 TO STA. 214+00.00

F.A.U. RTE.	SECTION	COUNTY	TOTAL SHEETS	SHEET NO.
7448	09-00933-01-BR	MACON	74	18
		CONTRACT NO. 6WGY(165)		
		ILLINOIS FED. AID PROJECT		

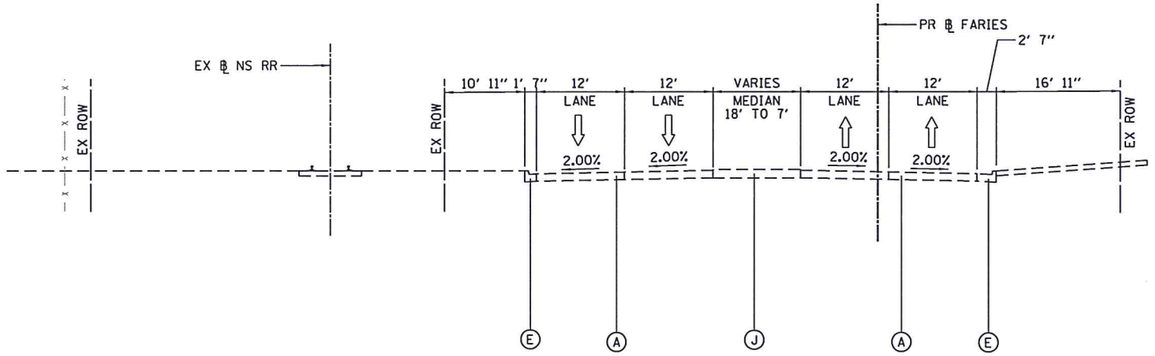

EXISTING FARIES PARKWAY

LOOKING EAST

PR ℄ FARIES PARKWAY STA 214+00.00 TO STA 215+00.00

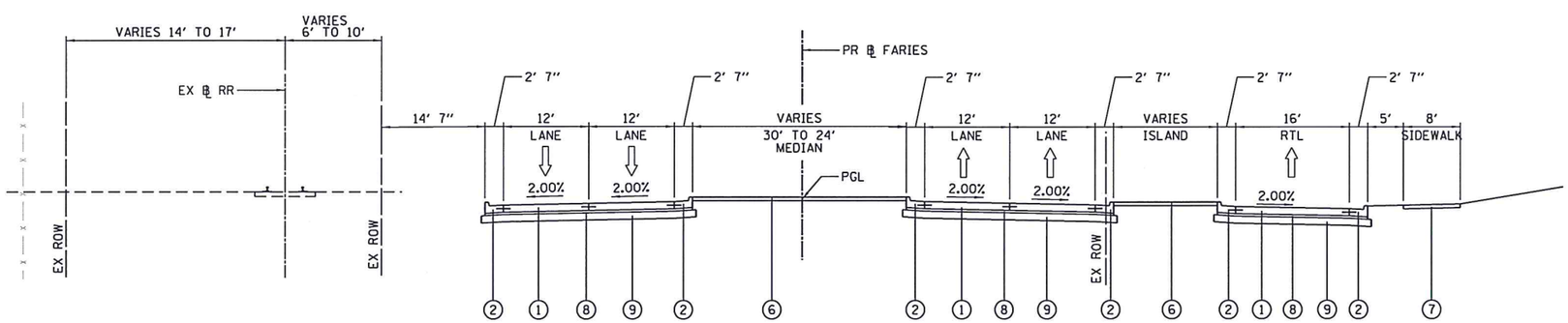

PROPOSED FARIES PARKWAY

LOOKING EAST

PR ℄ FARIES PARKWAY STA 214+00.00 TO STA 215+00.00

EXISTING LEGEND

- (A) EXISTING CONCRETE PAVEMENT, VARIES 10" TO 12"
- (B) EXISTING ASPHALT TREATED OPEN-GRADED DRAINAGE LAYER, 4"
- (C) EXISTING GEOTECHNICAL FABRIC
- (D) EXISTING STEEL PLATE BEAM GUARD RAIL
- (E) EXISTING COMBINATION CONCRETE CURB AND GUTTER, TYPE B-6.24
- (F) EXISTING COMBINATION CONCRETE CURB AND GUTTER, TYPE M-6.06
- (G) EXISTING CORRUGATED MEDIAN
- (H) EXISTING CONCRETE BARRIER WALL
- (I) EXISTING TIE BAR
- (J) EXISTING CONCRETE MEDIAN SURFACE
- (K) EXISTING PIPE UNDERDRAINS, 4"
- (L) EXISTING STEEL SHEET PILING
- (M) EXISTING SIDEWALK

PROPOSED LEGEND

- (1) PROPOSED PAVEMENT
- (2) PROPOSED COMBINATION CONCRETE CURB AND GUTTER, TYPE B-6.24
- (3) PROPOSED COMBINATION CONCRETE CURB AND GUTTER, TYPE M-6.06
- (4) PROPOSED CONCRETE BARRIER WALL
- (5) PROPOSED MSE RETAINING WALL
- (6) PROPOSED CONCRETE MEDIAN SURFACE
- (7) PROPOSED SIDEWALK
- (8) PROPOSED STABILIZED GRANULAR MATERIAL SUBBASE, 4"
- (9) AGGREGATE BASE COURSE
- (10) PROPOSED TIE BAR

FILE NAME 68603202_Typical Sections-18_Faries.dgn

AECOM
303 EAST WACKER DRIVE, SUITE 1400
CHICAGO, IL 60601-5276
PHONE: (312) 373-7700 FAX: (312) 373-6800

USER NAME = SearsB	DESIGNED - LMB	REVISED -	
	DRAWN - LMB	REVISED -	
PLOT SCALE = 20.0000 ' / in.	CHECKED - WBS	REVISED -	
PLOT DATE = 8/30/2019	DATE - 8/30/19	REVISED -	

STATE OF ILLINOIS
DEPARTMENT OF TRANSPORTATION

FARIES PARKWAY
TYPICAL SECTIONS

SCALE: 1"=10' | SHEET 18 OF 32 SHEETS | STA. 214+00.00 TO STA. 215+00.00

F.A.U. RTE.	SECTION	COUNTY	TOTAL SHEETS	SHEET NO.
7448	09-00933-01-BR	MACON	74	19
		CONTRACT NO. 6WGY(165)		
		ILLINOIS FED. AID PROJECT		

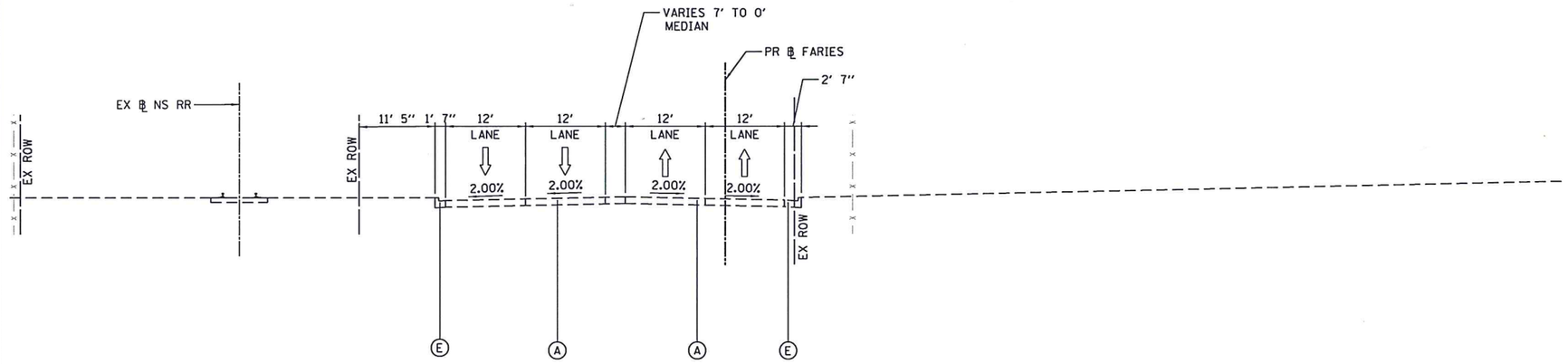

EXISTING FARIES PARKWAY

LOOKING EAST

PR ℄ FARIES PARKWAY STA 215+00.00 TO STA 216+00.00

EXISTING LEGEND

- (A) EXISTING CONCRETE PAVEMENT, VARIES 10" TO 12"
- (B) EXISTING ASPHALT TREATED OPEN-GRADED DRAINAGE LAYER, 4"
- (C) EXISTING GEOTECHNICAL FABRIC
- (D) EXISTING STEEL PLATE BEAM GUARD RAIL
- (E) EXISTING COMBINATION CONCRETE CURB AND GUTTER, TYPE B-6.24
- (F) EXISTING COMBINATION CONCRETE CURB AND GUTTER, TYPE M-6.06
- (G) EXISTING CORRUGATED MEDIAN
- (H) EXISTING CONCRETE BARRIER WALL
- (I) EXISTING TIE BAR
- (J) EXISTING CONCRETE MEDIAN SURFACE
- (K) EXISTING PIPE UNDERDRAINS, 4"
- (L) EXISTING STEEL SHEET PILING
- (M) EXISTING SIDEWALK

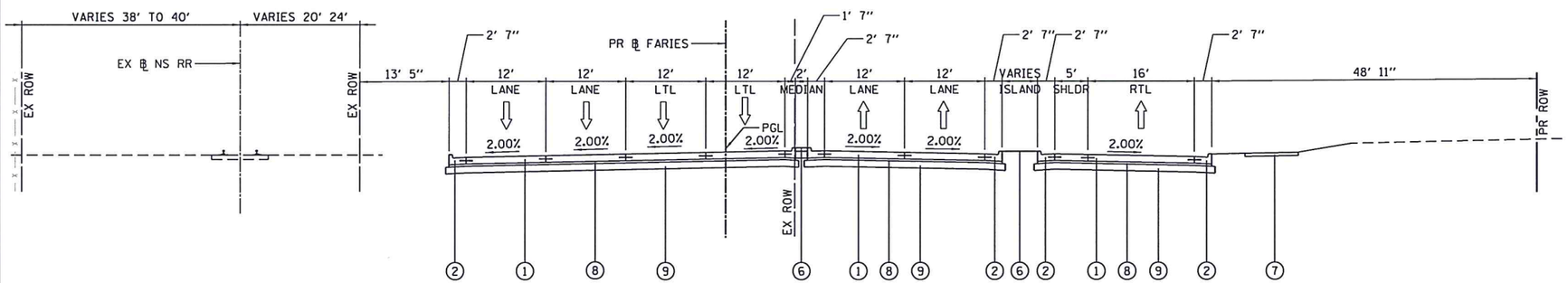

PROPOSED FARIES PARKWAY

LOOKING EAST

PR ℄ FARIES PARKWAY STA 215+00.00 TO STA 216+00.00

PROPOSED LEGEND

- (1) PROPOSED PAVEMENT
- (2) PROPOSED COMBINATION CONCRETE CURB AND GUTTER, TYPE B-6.24
- (3) PROPOSED COMBINATION CONCRETE CURB AND GUTTER, TYPE M-6.06
- (4) PROPOSED CONCRETE BARRIER WALL
- (5) PROPOSED MSE RETAINING WALL
- (6) PROPOSED CONCRETE MEDIAN SURFACE
- (7) PROPOSED SIDEWALK
- (8) PROPOSED STABILIZED GRANULAR MATERIAL SUBBASE, 4"
- (9) AGGREGATE BASE COURSE
- (10) PROPOSED TIE BAR

FILE NAME 68683202_Typical Sections-19_Faries.dgn

AECOM
303 EAST WACKER DRIVE, SUITE 1400
CHICAGO, IL 60601-5276
PHONE: (312) 373-7700 FAX: (312) 373-6800

USER NAME = SearsB	DESIGNED - LMB	REVISED -	
	DRAWN - LMB	REVISED -	
PLOT SCALE = 20.0000 ' / in.	CHECKED - WBS	REVISED -	
PLOT DATE = 8/30/2019	DATE - 8/30/19	REVISED -	

STATE OF ILLINOIS
DEPARTMENT OF TRANSPORTATION

FARIES PARKWAY
TYPICAL SECTIONS

SCALE: 1"=10' | SHEET 19 OF 32 SHEETS | STA. 215+00.00 TO STA. 216+00.00

F.A.U. RTE.	SECTION	COUNTY	TOTAL SHEETS	SHEET NO.
7448	09-00933-01-BR	MACON	74	20
		CONTRACT NO. 6WGY(165)		
	ILLINOIS	FED. AID PROJECT		

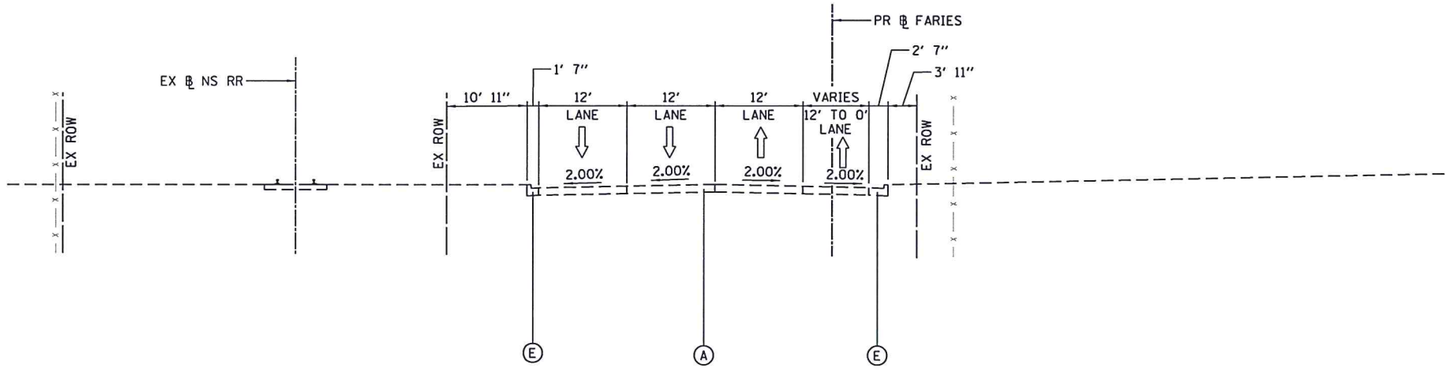

EXISTING FARIES PARKWAY

LOOKING EAST

PR ℄ FARIES PARKWAY STA 216+00.00 TO STA 219+00.00

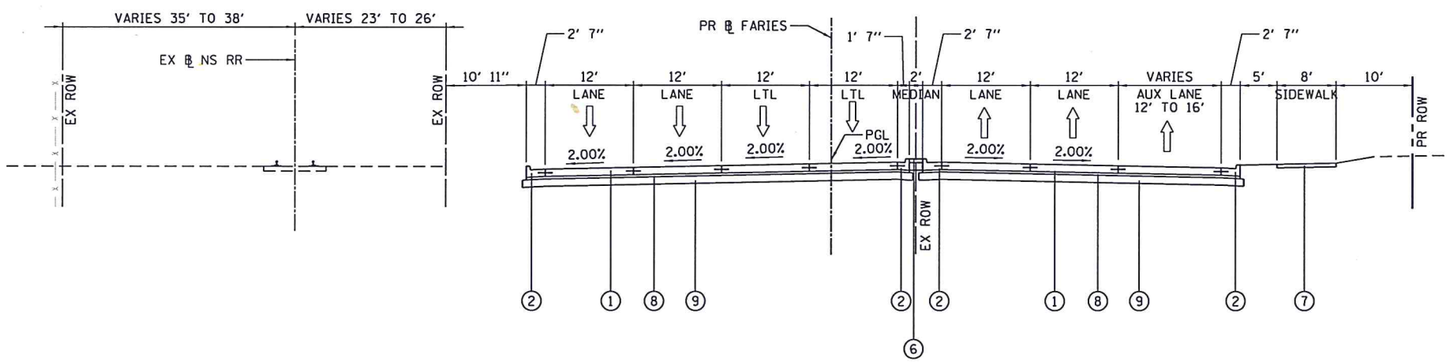

PROPOSED FARIES PARKWAY

LOOKING EAST

PR ℄ FARIES PARKWAY STA 216+00.00 TO STA 219+00.00

EXISTING LEGEND

- (A) EXISTING CONCRETE PAVEMENT, VARIES 10" TO 12"
- (B) EXISTING ASPHALT TREATED OPEN-GRADED DRAINAGE LAYER, 4"
- (C) EXISTING GEOTECHNICAL FABRIC
- (D) EXISTING STEEL PLATE BEAM GUARD RAIL
- (E) EXISTING COMBINATION CONCRETE CURB AND GUTTER, TYPE B-6.24
- (F) EXISTING COMBINATION CONCRETE CURB AND GUTTER, TYPE M-6.06
- (G) EXISTING CORRUGATED MEDIAN
- (H) EXISTING CONCRETE BARRIER WALL
- (I) EXISTING TIE BAR
- (J) EXISTING CONCRETE MEDIAN SURFACE
- (K) EXISTING PIPE UNDERDRAINS, 4"
- (L) EXISTING STEEL SHEET PILING
- (M) EXISTING SIDEWALK

PROPOSED LEGEND

- (1) PROPOSED PAVEMENT
- (2) PROPOSED COMBINATION CONCRETE CURB AND GUTTER, TYPE B-6.24
- (3) PROPOSED COMBINATION CONCRETE CURB AND GUTTER, TYPE M-6.06
- (4) PROPOSED CONCRETE BARRIER WALL
- (5) PROPOSED MSE RETAINING WALL
- (6) PROPOSED CONCRETE MEDIAN SURFACE
- (7) PROPOSED SIDEWALK
- (8) PROPOSED STABILIZED GRANULAR MATERIAL SUBBASE, 4"
- (9) AGGREGATE BASE COURSE
- (10) PROPOSED TIE BAR

FILE NAME 68603282_Typical Sections-20_Faries.dgn

AECOM
303 EAST WACKER DRIVE, SUITE 1400
CHICAGO, IL 60601-5276
PHONE: (312) 373-7700 FAX: (312) 373-6800

USER NAME = SearsB	DESIGNED - LMB	REVISED -	
	DRAWN - LMB	REVISED -	
PLOT SCALE = 20.0000 ' / in.	CHECKED - WBS	REVISED -	
PLOT DATE = 8/30/2019	DATE - 8/30/19	REVISED -	

STATE OF ILLINOIS
DEPARTMENT OF TRANSPORTATION

FARIES PARKWAY
TYPICAL SECTIONS

SCALE: 1"=10' | SHEET 20 OF 32 SHEETS | STA. 216+00.00 TO STA. 219+00.00

F.A.U. RTE.	SECTION	COUNTY	TOTAL SHEETS	SHEET NO.
7448	09-00933-01-BR	MACON	74	21
		CONTRACT NO. 6WGY(165)		
		ILLINOIS FED. AID PROJECT		

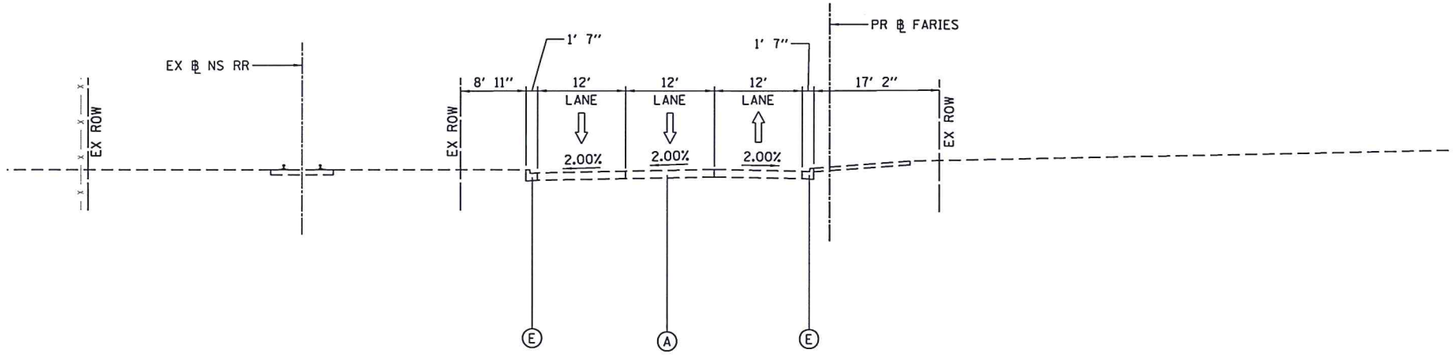

EXISTING FARIES PARKWAY

LOOKING EAST

PR ℄ FARIES PARKWAY STA 219+00.00 TO STA 222+00.00

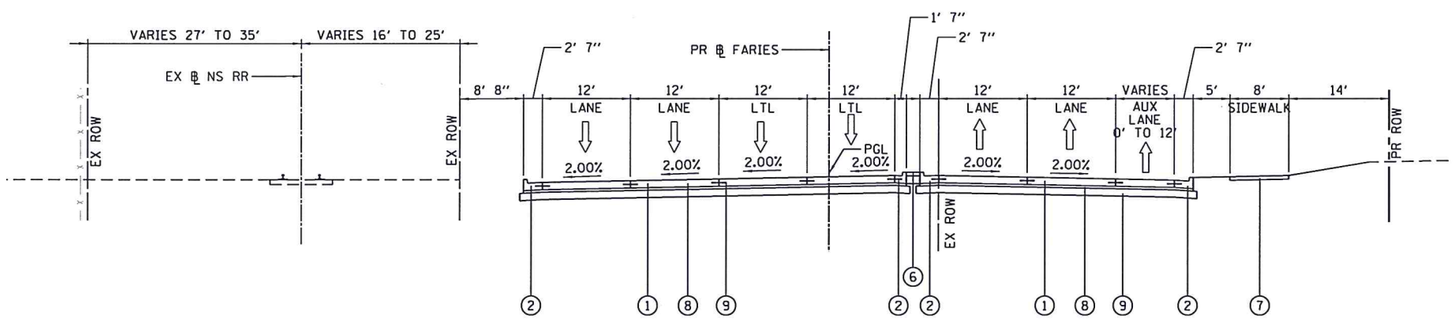

PROPOSED FARIES PARKWAY

LOOKING EAST

PR ℄ FARIES PARKWAY STA 219+00.00 TO STA 222+00.00

EXISTING LEGEND

- (A) EXISTING CONCRETE PAVEMENT, VARIES 10" TO 12"
- (B) EXISTING ASPHALT TREATED OPEN-GRADED DRAINAGE LAYER, 4"
- (C) EXISTING GEOTECHNICAL FABRIC
- (D) EXISTING STEEL PLATE BEAM GUARD RAIL
- (E) EXISTING COMBINATION CONCRETE CURB AND GUTTER, TYPE B-6.24
- (F) EXISTING COMBINATION CONCRETE CURB AND GUTTER, TYPE M-6.06
- (G) EXISTING CORRUGATED MEDIAN
- (H) EXISTING CONCRETE BARRIER WALL
- (I) EXISTING TIE BAR
- (J) EXISTING CONCRETE MEDIAN SURFACE
- (K) EXISTING PIPE UNDERDRAINS, 4"
- (L) EXISTING STEEL SHEET PILING
- (M) EXISTING SIDEWALK

PROPOSED LEGEND

- (1) PROPOSED PAVEMENT
- (2) PROPOSED COMBINATION CONCRETE CURB AND GUTTER, TYPE B-6.24
- (3) PROPOSED COMBINATION CONCRETE CURB AND GUTTER, TYPE M-6.06
- (4) PROPOSED CONCRETE BARRIER WALL
- (5) PROPOSED MSE RETAINING WALL
- (6) PROPOSED CONCRETE MEDIAN SURFACE
- (7) PROPOSED SIDEWALK
- (8) PROPOSED STABILIZED GRANULAR MATERIAL SUBBASE, 4"
- (9) AGGREGATE BASE COURSE
- (10) PROPOSED TIE BAR

FILE NAME 68603202_Typical Sections-21_Faries.dgn

AECOM
303 EAST WACKER DRIVE, SUITE 1400
CHICAGO, IL 60601-5276
PHONE: (312) 373-7700 FAX: (312) 373-6800

USER NAME = SearsB	DESIGNED - LMB	REVISED -	
	DRAWN - LMB	REVISED -	
PLOT SCALE = 20.0000 ' / in.	CHECKED - WBS	REVISED -	
PLOT DATE = 8/30/2019	DATE - 8/30/19	REVISED -	

STATE OF ILLINOIS
DEPARTMENT OF TRANSPORTATION

FARIES PARKWAY
TYPICAL SECTIONS

SCALE: 1"=10' | SHEET 21 OF 32 SHEETS | STA. 219+00.00 TO STA. 222+00.00

F.A.U. RTE.	SECTION	COUNTY	TOTAL SHEETS	SHEET NO.
7448	09-00933-01-BR	MACON	74	22
		CONTRACT NO. 6WGY(165)		
	ILLINOIS	FED. AID PROJECT		

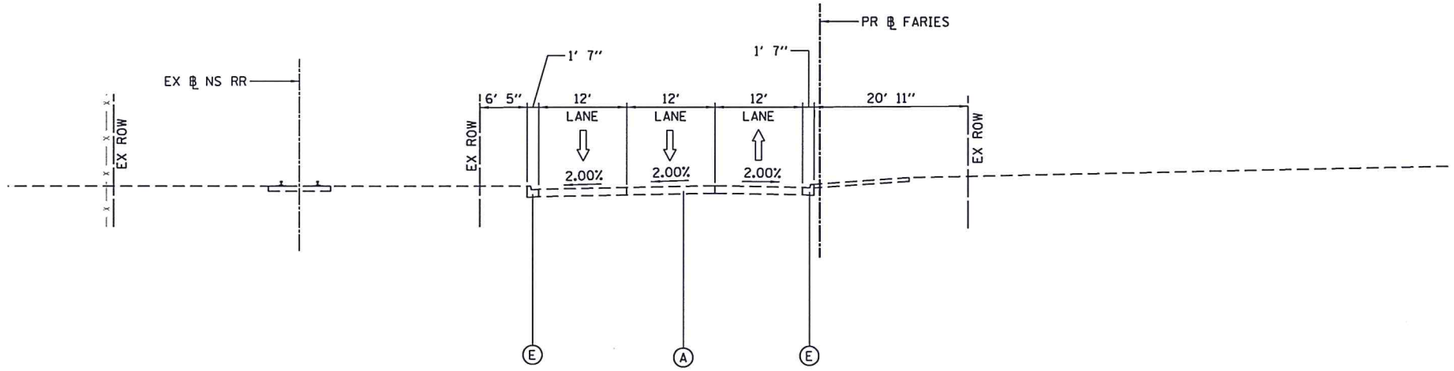

EXISTING FARIES PARKWAY

LOOKING EAST

PR ℄ FARIES PARKWAY STA 222+00.00 TO STA 224+70.00

EXISTING LEGEND

- (A) EXISTING CONCRETE PAVEMENT, VARIES 10" TO 12"
- (B) EXISTING ASPHALT TREATED OPEN-GRADED DRAINAGE LAYER, 4"
- (C) EXISTING GEOTECHNICAL FABRIC
- (D) EXISTING STEEL PLATE BEAM GUARD RAIL
- (E) EXISTING COMBINATION CONCRETE CURB AND GUTTER, TYPE B-6.24
- (F) EXISTING COMBINATION CONCRETE CURB AND GUTTER, TYPE M-6.06
- (G) EXISTING CORRUGATED MEDIAN
- (H) EXISTING CONCRETE BARRIER WALL
- (I) EXISTING TIE BAR
- (J) EXISTING CONCRETE MEDIAN SURFACE
- (K) EXISTING PIPE UNDERDRAINS, 4"
- (L) EXISTING STEEL SHEET PILING
- (M) EXISTING SIDEWALK

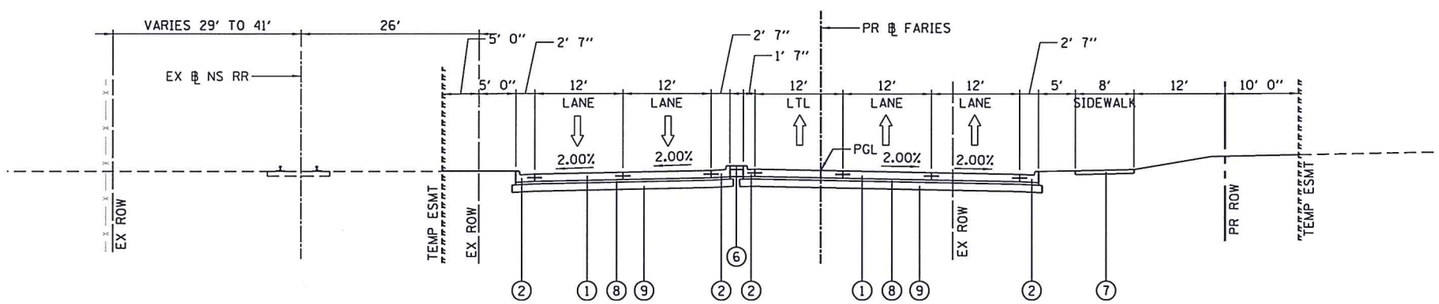

PROPOSED FARIES PARKWAY

LOOKING EAST

PR ℄ FARIES PARKWAY STA 222+00.00 TO STA 224+70.00

PROPOSED LEGEND

- (1) PROPOSED PAVEMENT
- (2) PROPOSED COMBINATION CONCRETE CURB AND GUTTER, TYPE B-6.24
- (3) PROPOSED COMBINATION CONCRETE CURB AND GUTTER, TYPE M-6.06
- (4) PROPOSED CONCRETE BARRIER WALL
- (5) PROPOSED MSE RETAINING WALL
- (6) PROPOSED CONCRETE MEDIAN SURFACE
- (7) PROPOSED SIDEWALK
- (8) PROPOSED STABILIZED GRANULAR MATERIAL SUBBASE, 4"
- (9) AGGREGATE BASE COURSE
- (10) PROPOSED TIE BAR

FILE NAME 68683282_Typical Sections-22_Faries.dgn

AECOM
303 EAST WACKER DRIVE, SUITE 1400
CHICAGO, IL 60601-5276
PHONE: (312) 373-7700 FAX: (312) 373-6800

USER NAME = SearsB	DESIGNED - LMB	REVISED -
	DRAWN - LMB	REVISED -
PLOT SCALE = 20.0000 ' / in.	CHECKED - WBS	REVISED -
PLOT DATE = 8/30/2019	DATE - 8/30/19	REVISED -

STATE OF ILLINOIS
DEPARTMENT OF TRANSPORTATION

FARIES PARKWAY
TYPICAL SECTIONS

SCALE: 1"=10' | SHEET 22 OF 32 SHEETS | STA. 222+00.00 TO STA. 224+70.00

F.A.U. RTE.	SECTION	COUNTY	TOTAL SHEETS	SHEET NO.
7448	09-00933-01-BR	MACON	74	23

CONTRACT NO. 6WGY(165)

ILLINOIS FED. AID PROJECT

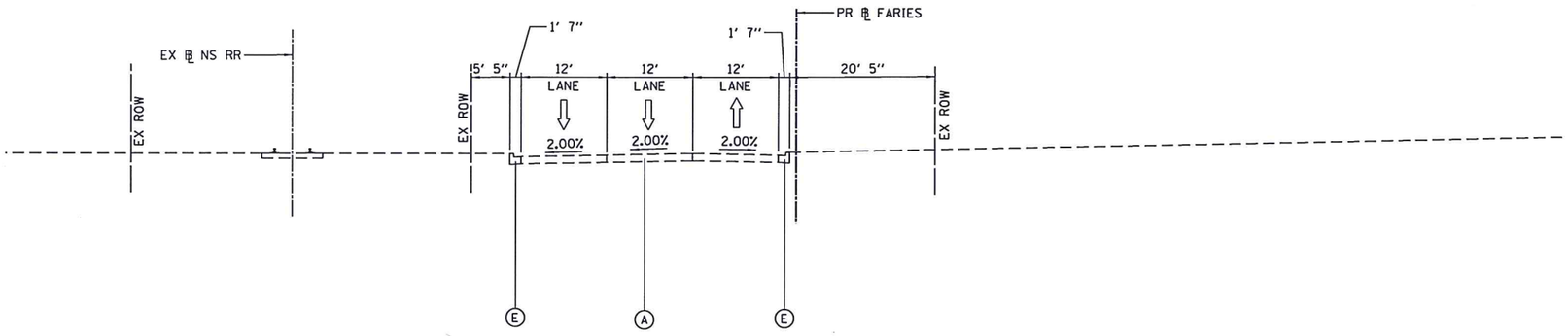

EXISTING FARIES PARKWAY

LOOKING EAST

PR ℄ FARIES PARKWAY STA 224+70.00 TO STA 227+00.00

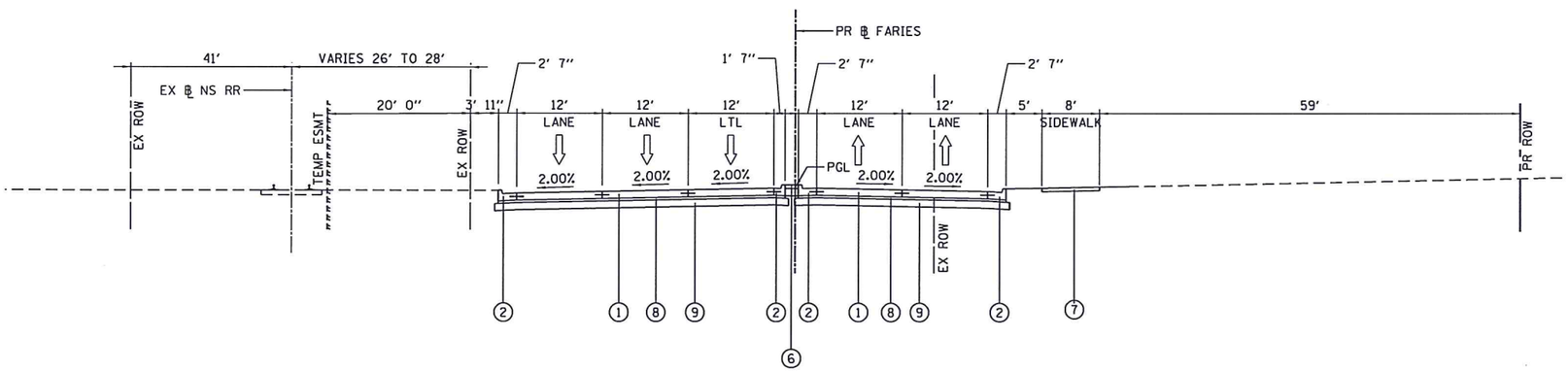

PROPOSED FARIES PARKWAY

LOOKING EAST

PR ℄ FARIES PARKWAY STA 224+70.00 TO STA 227+00.00

EXISTING LEGEND

- (A) EXISTING CONCRETE PAVEMENT, VARIES 10" TO 12"
- (B) EXISTING ASPHALT TREATED OPEN-GRADED DRAINAGE LAYER, 4"
- (C) EXISTING GEOTECHNICAL FABRIC
- (D) EXISTING STEEL PLATE BEAM GUARD RAIL
- (E) EXISTING COMBINATION CONCRETE CURB AND GUTTER, TYPE B-6.24
- (F) EXISTING COMBINATION CONCRETE CURB AND GUTTER, TYPE M-6.06
- (G) EXISTING CORRUGATED MEDIAN
- (H) EXISTING CONCRETE BARRIER WALL
- (I) EXISTING TIE BAR
- (J) EXISTING CONCRETE MEDIAN SURFACE
- (K) EXISTING PIPE UNDERDRAINS, 4"
- (L) EXISTING STEEL SHEET PILING
- (M) EXISTING SIDEWALK

PROPOSED LEGEND

- (1) PROPOSED PAVEMENT
- (2) PROPOSED COMBINATION CONCRETE CURB AND GUTTER, TYPE B-6.24
- (3) PROPOSED COMBINATION CONCRETE CURB AND GUTTER, TYPE M-6.06
- (4) PROPOSED CONCRETE BARRIER WALL
- (5) PROPOSED MSE RETAINING WALL
- (6) PROPOSED CONCRETE MEDIAN SURFACE
- (7) PROPOSED SIDEWALK
- (8) PROPOSED STABILIZED GRANULAR MATERIAL SUBBASE, 4"
- (9) AGGREGATE BASE COURSE
- (10) PROPOSED TIE BAR

FILE NAME 60603202_Typical Sections-23_Faries.dgn

AECOM
303 EAST WACKER DRIVE, SUITE 1400
CHICAGO, IL 60601-5276
PHONE: (312) 373-7700 FAX: (312) 373-6800

USER NAME = SearsB	DESIGNED - LMB	REVISED -	
	DRAWN - LMB	REVISED -	
PLOT SCALE = 20.0000 ' / in.	CHECKED - WBS	REVISED -	
PLOT DATE = 8/30/2019	DATE - 8/30/19	REVISED -	

STATE OF ILLINOIS
DEPARTMENT OF TRANSPORTATION

FARIES PARKWAY
TYPICAL SECTIONS

SCALE: 1"=10' | SHEET 23 OF 32 SHEETS | STA. 224+70.00 TO STA. 227+00.00

F.A.U. RTE.	SECTION	COUNTY	TOTAL SHEETS	SHEET NO.
7448	09-00933-01-BR	MACON	74	24
		CONTRACT NO. 6WGY(165)		
	ILLINOIS	FED. AID PROJECT		

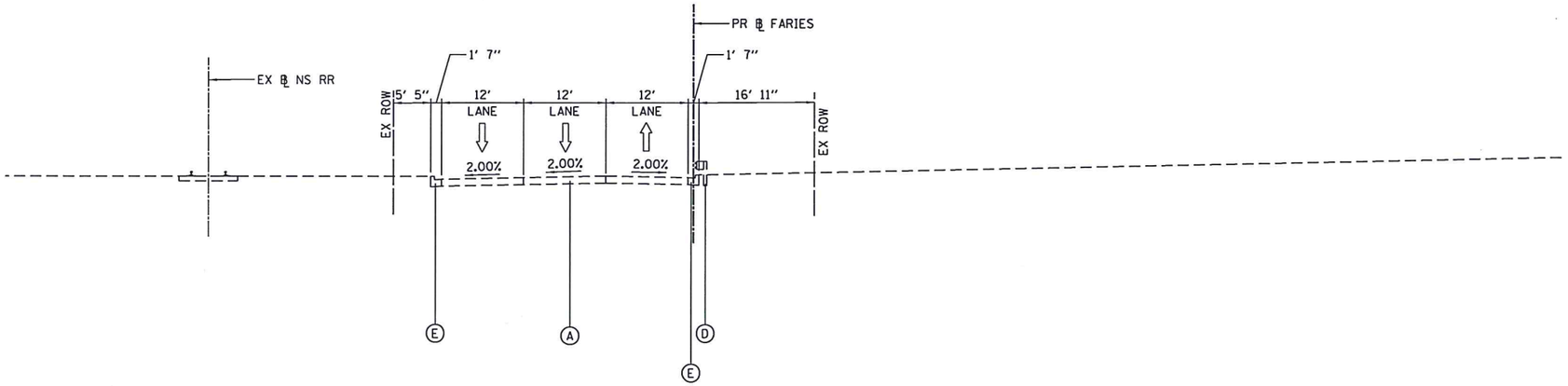

EXISTING FARIES PARKWAY

LOOKING EAST

PR ℄ FARIES PARKWAY STA 227+00.00 TO STA 233+00.00

EXISTING LEGEND

- (A) EXISTING CONCRETE PAVEMENT, VARIES 10" TO 12"
- (B) EXISTING ASPHALT TREATED OPEN-GRADED DRAINAGE LAYER, 4"
- (C) EXISTING GEOTECHNICAL FABRIC
- (D) EXISTING STEEL PLATE BEAM GUARD RAIL
- (E) EXISTING COMBINATION CONCRETE CURB AND GUTTER, TYPE B-6.24
- (F) EXISTING COMBINATION CONCRETE CURB AND GUTTER, TYPE M-6.06
- (G) EXISTING CORRUGATED MEDIAN
- (H) EXISTING CONCRETE BARRIER WALL
- (I) EXISTING TIE BAR
- (J) EXISTING CONCRETE MEDIAN SURFACE
- (K) EXISTING PIPE UNDERDRAINS, 4"
- (L) EXISTING STEEL SHEET PILING
- (M) EXISTING SIDEWALK

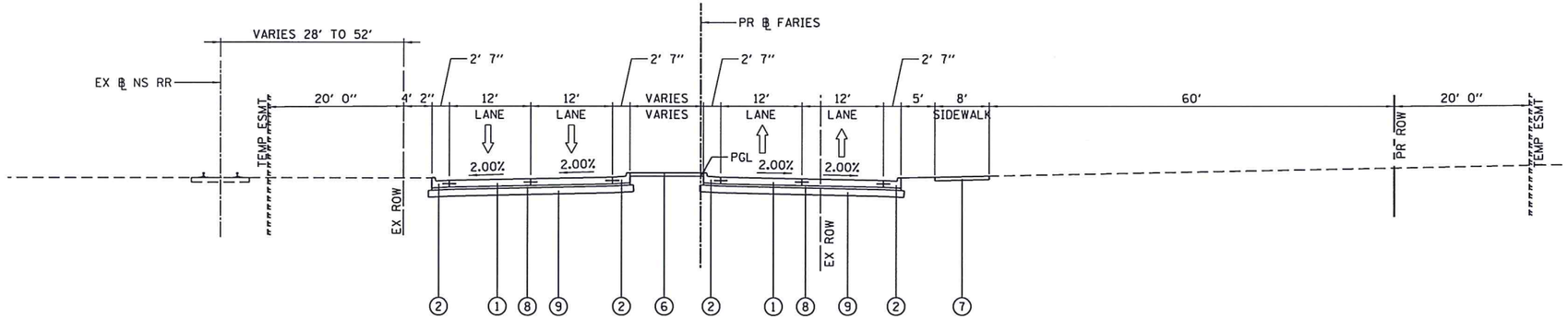

PROPOSED FARIES PARKWAY

LOOKING EAST

PR ℄ FARIES PARKWAY STA 227+00.00 TO STA 233+00.00

PROPOSED LEGEND

- (1) PROPOSED PAVEMENT
- (2) PROPOSED COMBINATION CONCRETE CURB AND GUTTER, TYPE B-6.24
- (3) PROPOSED COMBINATION CONCRETE CURB AND GUTTER, TYPE M-6.06
- (4) PROPOSED CONCRETE BARRIER WALL
- (5) PROPOSED MSE RETAINING WALL
- (6) PROPOSED CONCRETE MEDIAN SURFACE
- (7) PROPOSED SIDEWALK
- (8) PROPOSED STABILIZED GRANULAR MATERIAL SUBBASE, 4"
- (9) AGGREGATE BASE COURSE
- (10) PROPOSED TIE BAR

FILE NAME 68683202_Typical Sections-24_Faries.dgn

AECOM
303 EAST WACKER DRIVE, SUITE 1400
CHICAGO, IL 60601-5276
PHONE: (312) 373-7100 FAX: (312) 373-6800

USER NAME = SearsB	DESIGNED - LMB	REVISED -
	DRAWN - LMB	REVISED -
PLOT SCALE = 20.0000 ' / in.	CHECKED - WBS	REVISED -
PLOT DATE = 8/30/2019	DATE - 8/30/19	REVISED -

STATE OF ILLINOIS
DEPARTMENT OF TRANSPORTATION

FARIES PARKWAY
TYPICAL SECTIONS

SCALE: 1"=10' | SHEET 24 OF 32 SHEETS | STA. 227+00.00 TO STA. 233+00.00

F.A.U. RTE.	SECTION	COUNTY	TOTAL SHEETS	SHEET NO.
7448	09-00933-01-BR	MACON	74	25

CONTRACT NO. 6WGY(165)

ILLINOIS FED. AID PROJECT

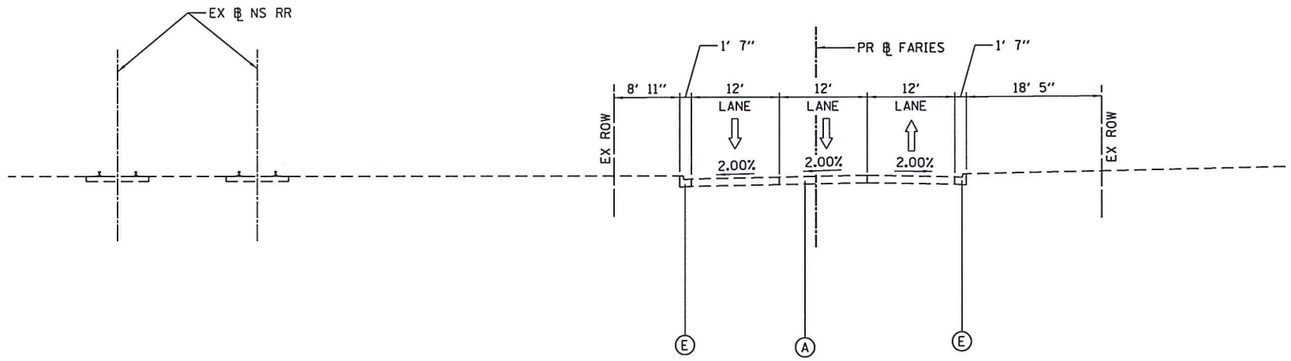

EXISTING FARIES PARKWAY

LOOKING EAST

PR ℄ FARIES PARKWAY STA 233+00.00 TO STA 236+71.24

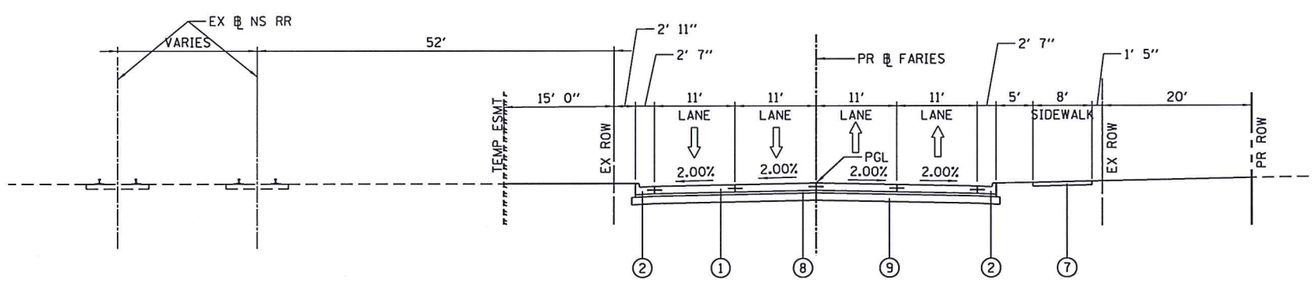

PROPOSED FARIES PARKWAY

LOOKING EAST

PR ℄ FARIES PARKWAY STA 233+00.00 TO STA 236+71.24

EXISTING LEGEND

- (A) EXISTING CONCRETE PAVEMENT, VARIES 10" TO 12"
- (B) EXISTING ASPHALT TREATED OPEN-GRADED DRAINAGE LAYER, 4"
- (C) EXISTING GEOTECHNICAL FABRIC
- (D) EXISTING STEEL PLATE BEAM GUARD RAIL
- (E) EXISTING COMBINATION CONCRETE CURB AND GUTTER, TYPE B-6.24
- (F) EXISTING COMBINATION CONCRETE CURB AND GUTTER, TYPE M-6.06
- (G) EXISTING CORRUGATED MEDIAN
- (H) EXISTING CONCRETE BARRIER WALL
- (I) EXISTING TIE BAR
- (J) EXISTING CONCRETE MEDIAN SURFACE
- (K) EXISTING PIPE UNDERDRAINS, 4"
- (L) EXISTING STEEL SHEET PILING
- (M) EXISTING SIDEWALK

PROPOSED LEGEND

- (1) PROPOSED PAVEMENT
- (2) PROPOSED COMBINATION CONCRETE CURB AND GUTTER, TYPE B-6.24
- (3) PROPOSED COMBINATION CONCRETE CURB AND GUTTER, TYPE M-6.06
- (4) PROPOSED CONCRETE BARRIER WALL
- (5) PROPOSED MSE RETAINING WALL
- (6) PROPOSED CONCRETE MEDIAN SURFACE
- (7) PROPOSED SIDEWALK
- (8) PROPOSED STABILIZED GRANULAR MATERIAL SUBBASE, 4"
- (9) AGGREGATE BASE COURSE
- (10) PROPOSED TIE BAR

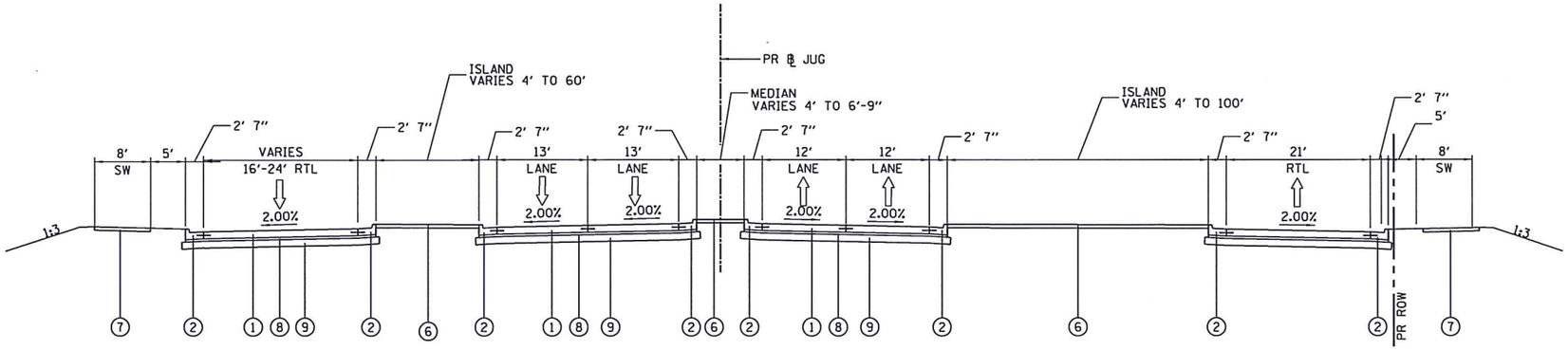

PROPOSED JUG HANDLE CONNECTOR ROAD

LOOKING EAST

PR ℄ JUG HANDLE CONNECTOR ROAD STA 300+00.00 TO 301+52.00
AND 306+46.00 TO STA 308+00.00

PROPOSED LEGEND

1. PROPOSED PAVEMENT
2. PROPOSED COMBINATION CONCRETE CURB AND GUTTER, TYPE B-6.24
3. PROPOSED COMBINATION CONCRETE CURB AND GUTTER, TYPE M-6.06
4. PROPOSED CONCRETE BARRIER WALL
5. PROPOSED MSE RETAINING WALL
6. PROPOSED CONCRETE MEDIAN SURFACE
7. PROPOSED SIDEWALK
8. PROPOSED STABILIZED GRANULAR MATERIAL SUBBASE, 4"
9. AGGREGATE BASE COURSE
10. PROPOSED TIE BAR

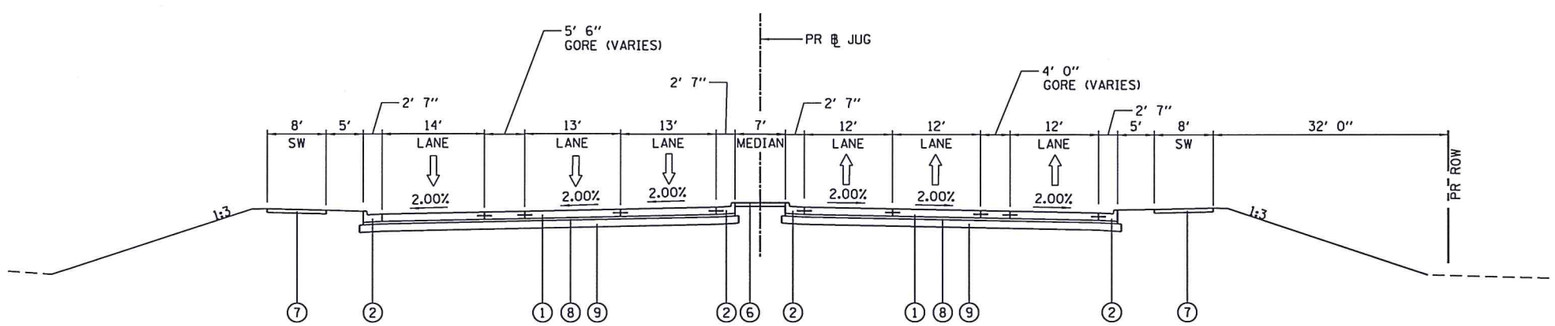

PROPOSED JUG HANDLE CONNECTOR ROAD

LOOKING EAST

PR ℄ JUG HANDLE CONNECTOR ROAD STA 306+00.00 TO STA 306+46.00

FILE NAME 68683202_Typical Sections-26_Jug.dgn

AECOM
303 EAST WACKER DRIVE, SUITE 1400
CHICAGO, IL 60601-5276
PHONE: (312) 373-7700 FAX: (312) 373-6800

USER NAME = SearsB	DESIGNED - LMB	REVISED -	
	DRAWN - LMB	REVISED -	
PLOT SCALE = 20.0000 ' / in.	CHECKED - WBS	REVISED -	
PLOT DATE = 8/30/2019	DATE - 8/30/19	REVISED -	

STATE OF ILLINOIS
DEPARTMENT OF TRANSPORTATION

JUG HANDLE CONNECTOR ROAD
TYPICAL SECTIONS

SCALE: 1"=10' | SHEET 26 OF 32 SHEETS | STA. 306+00.00 TO STA. 306+46.00

F.A.U. RTE.	SECTION	COUNTY	TOTAL SHEETS	SHEET NO.
7448	09-00933-01-BR	MACON	74	27
		CONTRACT NO. 6WGY(165)		
	ILLINOIS	FED. AID PROJECT		

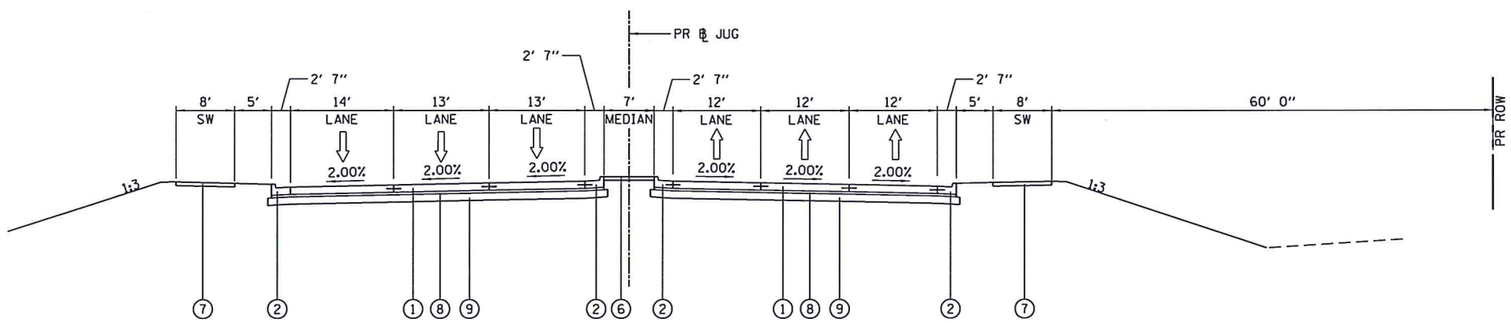

PROPOSED JUG HANDLE CONNECTOR ROAD

LOOKING EAST

PR ℄ JUG HANDLE CONNECTOR ROAD STA 301+52.00 TO 306+00.00

PROPOSED LEGEND

1. PROPOSED PAVEMENT
2. PROPOSED COMBINATION CONCRETE CURB AND GUTTER, TYPE B-6.24
3. PROPOSED COMBINATION CONCRETE CURB AND GUTTER, TYPE M-6.06
4. PROPOSED CONCRETE BARRIER WALL
5. PROPOSED MSE RETAINING WALL
6. PROPOSED CONCRETE MEDIAN SURFACE
7. PROPOSED SIDEWALK
8. PROPOSED STABILIZED GRANULAR MATERIAL SUBBASE, 4"
9. AGGREGATE BASE COURSE
10. PROPOSED TIE BAR

FILE NAME 60603202_Typical Sections-27_Jug.dgn

AECOM
303 EAST WACKER DRIVE, SUITE 1400
CHICAGO, IL 60601-5276
PHONE: (312) 373-7700 FAX: (312) 373-6800

USER NAME = SearsB	DESIGNED - LMB	REVISED -
	DRAWN - LMB	REVISED -
PLOT SCALE = 20.0000 ' / in.	CHECKED - WBS	REVISED -
PLOT DATE = 8/30/2019	DATE - 8/30/19	REVISED -

STATE OF ILLINOIS
DEPARTMENT OF TRANSPORTATION

JUG HANDLE CONNECTOR ROAD
TYPICAL SECTIONS

SCALE: 1"=10' | SHEET 27 OF 32 SHEETS | STA. 301+52.00 TO STA. 306+00.00

F.A.U. RTE.	SECTION	COUNTY	TOTAL SHEETS	SHEET NO.
7448	09-00933-01-BR	MACON	74	28
		CONTRACT NO. 6WGY(165)		
	ILLINOIS	FED. AID PROJECT		

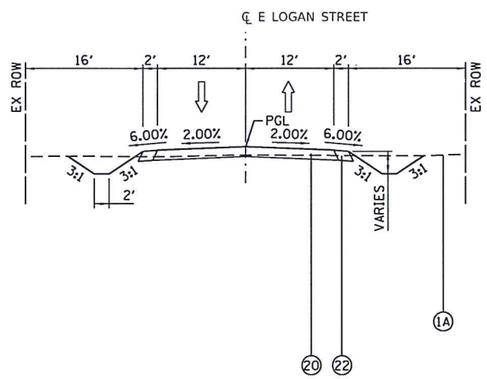

PROPOSED E LOGAN STREET

LOOKING EAST

PR ℄ E LOGAN STREET STATION TO BE DETERMINED

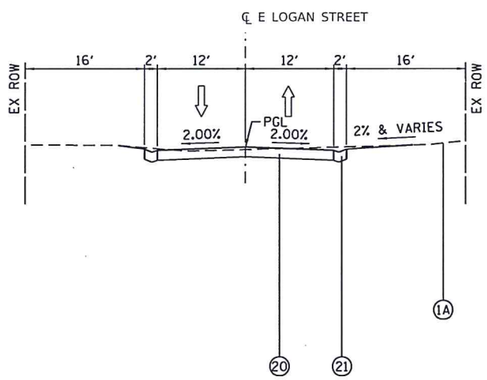

PROPOSED E LOGAN STREET

LOOKING EAST

PR ℄ E LOGAN STREET STATION TO BE DETERMINED

EXISTING LEGEND

1A EXISTING GROUND

PROPOSED LEGEND

20 PROPOSED PAVEMENT

21 PROPOSED TYPE B GUTTER

22 PROPOSED SHOULDER

FILE NAME 68683282_Typical Sections_Logan Street.dgn

design firm no. 184001036 whks engineers • planners • land surveyors

USER NAME = SearsB	DESIGNED - EJT	REVISED -	
	DRAWN - EJT	REVISED -	
PLOT SCALE = 20.0000 ' / in.	CHECKED - RKA	REVISED -	
PLOT DATE = 8/30/2019	DATE - 8/30/19	REVISED -	

STATE OF ILLINOIS
DEPARTMENT OF TRANSPORTATION

LOGAN STREET
TYPICAL SECTIONS

SCALE: | SHEET 28 OF 32 SHEETS | STA. 601+50.00 TO STA. 607+50.00

F.A.U. RTE.	SECTION	COUNTY	TOTAL SHEETS	SHEET NO.
7448	09-00933-01-BR	MACON	74	29
		CONTRACT NO. 6WGY(165)		
		ILLINOIS FED. AID PROJECT		

EXISTING LEGEND

(1A) EXISTING GROUND

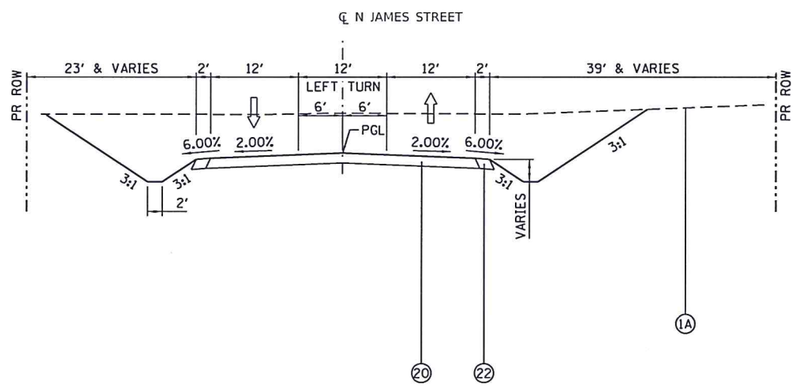

PROPOSED LEGEND

(20) PROPOSED PAVEMENT

(21) PROPOSED TYPE B GUTTER

(22) PROPOSED SHOULDER

PROPOSED NORTH JAMES STREET

LOOKING NORTH

PR ℄ JAMES STREET STATION 404+28 TO 407+75

FILE NAME 68693202_Typical Sections_James Street.dgn

design firm no. 184001036 whks engineers • planners • land surveyors	USER NAME = SearsB	DESIGNED - EJT	REVISED -	STATE OF ILLINOIS DEPARTMENT OF TRANSPORTATION	NORTH JAMES STREET TYPICAL SECTIONS	F.A.U. RTE.	SECTION	COUNTY	TOTAL SHEETS / SHEET NO.
		DRAWN - EJT	REVISED -			7448	09-00933-01-BR	MACON	74 / 30
	PLOT SCALE = 20.0000 ' / in.	CHECKED - RKA	REVISED -					CONTRACT NO. 6WGY(165)	
	PLOT DATE = 8/30/2019	DATE - 8/30/19	REVISED -		SCALE: SHEET 29 OF 32 SHEETS STA. 404+28.00 TO STA. 407+75.00		ILLINOIS FED. AID PROJECT		

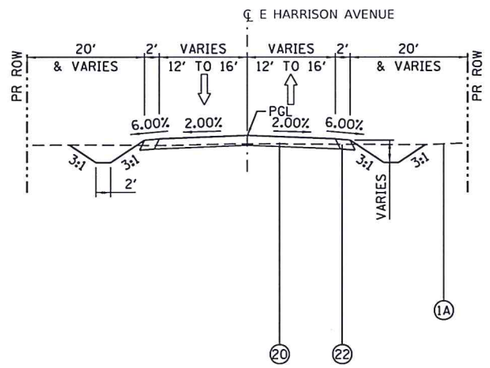

PROPOSED E HARRISON AVENUE

LOOKING NORTH
STA 800+00.00 TO STA 801+68.00
AND
STA 803+85.00 TO STA 808+00.00

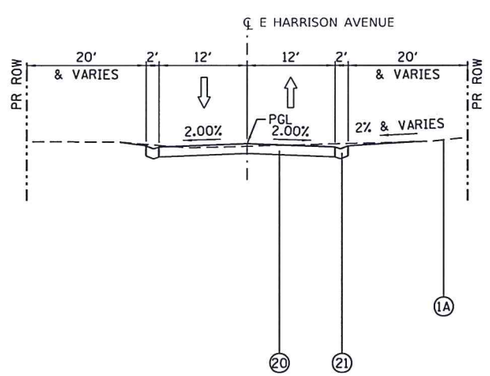

PROPOSED E HARRISON AVENUE

LOOKING NORTH

LT
STA 801+68.00 TO STA 803+85.00

RT
STA 801+80.00 TO STA 802+86.00

EXISTING LEGEND

1A EXISTING GROUND

PROPOSED LEGEND

20 PROPOSED PAVEMENT

21 PROPOSED TYPE B GUTTER

22 PROPOSED SHOULDER

FILE NAME 68683282_Typical Sections_Harrison West.dgn

design firm no. 184001036 whks engineers • planners • land surveyors

USER NAME = SearsB	DESIGNED - EJT	REVISED -	STATE OF ILLINOIS DEPARTMENT OF TRANSPORTATION
	DRAWN - EJT	REVISED -	
PLOT SCALE = 20.0000 ' / in.	CHECKED - RKA	REVISED -	
PLOT DATE = 8/30/2019	DATE - 8/30/19	REVISED -	

E HARRISON AVENUE (WEST OF BCR)
TYPICAL SECTIONS

SCALE: | SHEET 30 OF 32 SHEETS | STA. 800+00.00 TO STA. 808+00.00

F.A.U. RTE.	SECTION	COUNTY	TOTAL SHEETS	SHEET NO.
7448	09-00933-01-BR	MACON	74	31
		CONTRACT NO. 6WGY(165)		
	ILLINOIS	FED. AID PROJECT		

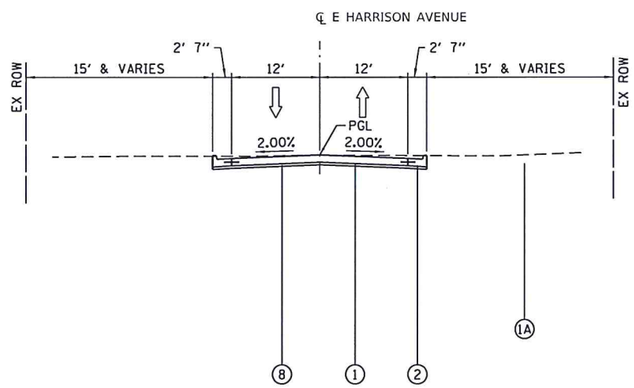

PROPOSED E HARRISON AVENUE

LOOKING EAST

PR ⅊ E HARRISON AVE STATION 700+00 TO 703+51

EXISTING LEGEND

1A EXISTING GROUND

PROPOSED LEGEND

1 PROPOSED PAVEMENT

2 PROPOSED COMBINATION CONCRETE CURB AND GUTTER, TYPE B-6.24

8 PROPOSED STABILIZED GRANULAR MATERIAL SUBBASE, 4"

FILE NAME 68693202_Typical Sections_E Harrison.dgn

AECOM
303 EAST WACKER DRIVE, SUITE 1400
CHICAGO, IL 60601-5276
PHONE: (312) 373-7700 FAX: (312) 373-6800

USER NAME = SearsB	DESIGNED - EJT	REVISED -	
	DRAWN - EJT	REVISED -	
PLOT SCALE = 20.0000 ' / in.	CHECKED - RKA	REVISED -	
PLOT DATE = 8/30/2019	DATE - 8/30/19	REVISED -	

STATE OF ILLINOIS
DEPARTMENT OF TRANSPORTATION

E HARRISON AVENUE (EAST OF BCR)
TYPICAL SECTIONS

SCALE: | SHEET 31 OF 32 SHEETS | STA. 700+00.00 TO STA. 703+50.85

F.A.U. RTE.	SECTION	COUNTY	TOTAL SHEETS	SHEET NO.
7448	09-00933-01-BR	MACON	74	32
		CONTRACT NO. 6WGY(165)		
	ILLINOIS	FED. AID PROJECT		

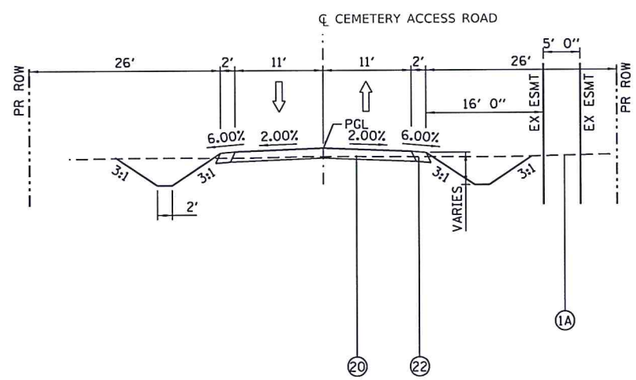

PROPOSED CEMETERY ACCESS ROAD

LOOKING NORTH

PR ℄ CEMETERY ACCESS STATION 900+00 TO 904+52

EXISTING LEGEND

1A EXISTING GROUND

PROPOSED LEGEND

20 PROPOSED PAVEMENT

22 PROPOSED SHOULDER

FILE NAME 68683282_Typical Sections_Cemetery Access.dgn

design firm no. 184001036 whks engineers • planners • land surveyors	USER NAME = SearsB	DESIGNED - EJT	REVISED -	STATE OF ILLINOIS DEPARTMENT OF TRANSPORTATION	CEMETERY ACCESS ROAD TYPICAL SECTIONS	F.A.U. RTE.	SECTION	COUNTY	TOTAL SHEETS / SHEET NO.
		DRAWN - EJT	REVISED -			7448	09-00933-01-BR	MACON	74 / 33
	PLOT SCALE = 20.0000 ' / in.	CHECKED - RKA	REVISED -					CONTRACT NO. 6WGY(165)	
	PLOT DATE = 8/30/2019	DATE - 8/30/19	REVISED -		SCALE: SHEET 32 OF 32 SHEETS STA. 900+00.00 TO STA. 904+52.12		ILLINOIS FED. AID PROJECT		